**Right choice for ultimate yield**
LSIS strives to maximize customers' profit in gratitude of choosing us for your partner.

# SV-iG5A User Manual

**0.4~22kW (200V/400V)**

**Safety Instructions**

- Read this manual carefully before installing, wiring, operating, servicing or inspecting this equipment.
- Keep this manual within easy reach for quick reference.

LS Industrial Systems

***Thank you for purchasing LS Variable Frequency Drives!***

# SAFETY INSTRUCTIONS

- Always follow safety instructions to prevent accidents and potential hazards from occurring.
- In this manual, safety messages are classified as follows:

| | |
|---|---|
| ⚠ **WARNING** | Improper operation may result in serious personal injury or death. |
| ⚠ **CAUTION** | Improper operation may result in slight to medium personal injury or property damage. |

- Throughout this manual we use the following two illustrations to make you aware of safety considerations:

| | |
|---|---|
| ⚠ | Identifies potential hazards under certain conditions.<br>Read the message and follow the instructions carefully. |
| ⚠ | Identifies shock hazards under certain conditions.<br>Particular attention should be directed because dangerous voltage may be present. |

- Keep operating instructions handy for quick reference.
- Read this manual carefully to maximize the performance of SV-iG5A series inverter and ensure its safe use.

# ⚠ WARNING

- **Do not remove the cover while power is applied or the unit is in operation.**
  Otherwise, electric shock could occur.
- **Do not run the inverter with the front cover removed.**
  Otherwise, you may get an electric shock due to high voltage terminals or charged capacitor exposure.
- **Do not remove the cover except for periodic inspections or wiring, even if the input power is not applied.**
  Otherwise, you may access the charged circuits and get an electric shock.

- **Wiring and periodic inspections should be performed at least 10 minutes after disconnecting the input power and after checking the DC link voltage is discharged with a meter (below DC 30V).**
  Otherwise, you may get an electric shock.

- **Operate the switches with dry hands.**
  Otherwise, you may get an electric shock.

- **Do not use the cable when its insulating tube is damaged.**
  Otherwise, you may get an electric shock.

- **Do not subject the cables to scratches, excessive stress, heavy loads or pinching.**
  Otherwise, you may get an electric shock.

## ⚠ CAUTION

- **Install the inverter on a non-flammable surface. Do not place flammable material nearby.**
  Otherwise, fire could occur.

- **Disconnect the input power if the inverter gets damaged.**
  Otherwise, it could result in a secondary accident and fire.

- **After the input power is applied or removed, the inverter will remain hot for a couple of minutes.**
  Otherwise, you may get bodily injuries such as skin-burn or damage.

- **Do not apply power to a damaged inverter or to an inverter with parts missing even if the installation is complete.**
  Otherwise, electric shock could occur.

- **Do not allow lint, paper, wood chips, dust, metallic chips or other foreign matter into the drive.**
  Otherwise, fire or accident could occur.

# OPERATING PRECAUTIONS

(1) Handling and installation

- ☐ Handle according to the weight of the product.
- ☐ Do not stack the inverter boxes higher than the number recommended.
- ☐ Install according to instructions specified in this manual.
- ☐ Do not open the cover during delivery.
- ☐ Do not place heavy items on the inverter.
- ☐ Check the inverter mounting orientation is correct.
- ☐ Do not drop the inverter, or subject it to impact.
- ☐ Follow your national electrical code for grounding. Recommended Ground impedance for 200 V Class is below 100 ohm and for 400V class below 10 ohm.
- ☐ iG5A series contains ESD (Electrostatic Discharge) sensitive parts. Take protective measures against ESD before touching the pcb for inspection or installation.
- ☐ Use the inverter under the following environmental conditions:

| | | |
|---|---|---|
| Environment | Ambient temperature | - 10 ~ 50 ℃ (non-freezing) |
| | Relative humidity | 90% RH or less (non-condensing) |
| | Storage temperature | - 20 ~ 65 ℃ |
| | Location | Protected from corrosive gas, combustible gas, oil mist or dust |
| | Altitude, Vibration | Max. 1,000m above sea level, Max. 5.9m/sec$^2$ (0.6G) or less |
| | Atmospheric pressure | 70 ~ 106 kPa |

(2) Wiring

- ☐ Do not connect a power factor correction capacitor, surge suppressor, or RFI filter to the output of the inverter.
- ☐ The connection orientation of the output cables U, V, W to the motor will affect the direction of rotation of the motor.
- ☐ Incorrect terminal wiring could result in the equipment damage.
- ☐ Reversing the polarity (+/-) of the terminals could damage the inverter.
- ☐ Only authorized personnel familiar with LS inverter should perform wiring and inspections.
- ☐ Always install the inverter before wiring. Otherwise, you may get an electric shock or have bodily injury.

(3) Trial run

- ☐ Check all parameters during operation. Changing parameter values might be required depending on the load.
- ☐ Always apply permissible range of voltage to the each terminal as indicated in this manual. Otherwise, it could lead to inverter damage.

(4) Operation precautions

- ☐ When the Auto restart function is selected, stay away from the equipment as a motor will restart suddenly after an alarm stop.
- ☐ The Stop key on the keypad is valid only when the appropriate function setting has been made. Prepare an emergency stop switch separately.
- ☐ If an alarm reset is made with the reference signal present, a sudden start will occur. Check that the reference signal is turned off in advance. Otherwise an accident could occur.
- ☐ Do not modify or alter anything inside the inverter.
- ☐ Motor might not be protected by electronic thermal function of inverter.
- ☐ Do not use a magnetic contactor on the inverter input for frequent starting/stopping of the inverter.
- ☐ Use a noise filter to reduce the effect of electromagnetic interference. Otherwise nearby electronic equipment may be affected.
- ☐ In case of input voltage unbalance, install AC reactor. Power Factor capacitors and generators may become overheated and damaged due to potential high frequency noise transmitted from inverter.
- ☐ Use an insulation-rectified motor or take measures to suppress the micro surge voltage when driving 400V class motor with inverter. A micro surge voltage attributable to wiring constant is generated at motor terminals, and may deteriorate insulation and damage motor.
- ☐ Before operating unit and prior to user programming, reset user parameters to default settings.
- ☐ Inverter can easily be set to high-speed operations, Verify capability of motor or machinery prior to operating unit.
- ☐ Stopping torque is not produced when using the DC-Break function. Install separate equipment when stopping torque is needed.

(5) Fault prevention precautions

- ☐ Provide a safety backup such as an emergency brake which will prevent the machine and equipment from hazardous conditions if the inverter fails.

(6) Maintenance, inspection and parts replacement

- ☐ Do not conduct a megger (insulation resistance) test on the control circuit of the inverter.
- ☐ Refer to Chapter 14 for periodic inspection (parts replacement).

(7) Disposal

- ☐ Handle the inverter as an industrial waste when disposing of it.

(8) General instructions

Many of the diagrams and drawings in this instruction manual show the inverter without a circuit breaker, a cover or partially open. Never run the inverter like this. Always place the cover with circuit breakers and follow this instruction manual when operating the inverter.

## Important User Information

- The purpose of this manual is to provide the user with the necessary information to install, program, start up and maintain the SV-iG5A series inverter.

- To assure successful installation and operation, the material presented must be thoroughly read and understood before proceeding.

- This manual contains…

| Chapter | Title | Description |
|---|---|---|
| 1 | Basic information & precautions | Provides general information and precautions for safe use of the SV-iG5A series inverter. |
| 2 | Installation & Wiring | Provides instructions on how to install and wiring for power source & signal terminal of SV-iG5A inverter. |
| 3 | Basic configuration | Describes how to connect the optional peripheral devices to the inverter. |
| 4 | Programming keypad & Basic operation | Illustrates keypad features and display & Provides instructions for quick start of the inverter. |
| 5 | Function list | Parameter values are listed. |
| 6 | Control block diagram | Shows control flow to help users easily understand operation mode. |
| 7 | Basic functions | Provides information for basic functions in the SV-iG5A |
| 8 | Advanced functions | Indicates advanced functions used for system application. |
| 9 | Monitoring | Gives information on the operating status and fault information. |
| 10 | Protective functions | Outlines protective functions of the SV-iG5A. |
| 11 | RS 485 | Provides specification of RS485 communication. |
| 12 | Troubleshooting & maintenance | Defines the various inverter faults and the appropriate action to take as well as general troubleshooting information. |
| 13 | Specifications & Option | Gives information on Input/Output rating, control type and more details of the SV-iG5A inverter.<br>Explains options including Remote keypad, Conduit, EMC filter, DB resistor. |

# Table of Contents

**CHAPTER 1 - Basic information & precautions ..... 1-1**
1.1Important precautions ..... 1-1
1.2 Product Details ..... 1-2
1.3 Product assembling & disassembling ..... 1-3
**CHAPTER 2 - Installation & Wiring ..... 2-1**
2.1 Installation precautions ..... 2-1
2.2Dimensions ..... 2-3
2.3 Terminal wiring (Control I/O) ..... 2-7
2.4 Specifications for power terminal block wiring ..... 2-9
2.5 Control terminal specification ..... 2-12
2.6 PNP/NPN selection and connector for communication option ..... 2-13
**CHAPTER 3 - Basic configuration ..... 3-1**
3.1 Connection of peripheral devices to the inverter ..... 3-1
3.2 Recommended MCCB ..... 3-2
3.3 Recommendable Fuse, Reactors ..... 3-3
**CHAPTER 4 - Programming Keypad & Basic operation ..... 4-1**
4.1 Keypad features ..... 4-1
4.2 Alpha-numeric view on the LED keypad ..... 4-2
4.3 Moving to other groups ..... 4-3
4.4 How to change the codes in a group ..... 4-5
4.5 Parameter setting ..... 4-7
4.6 Monitoring of operation status ..... 4-10
4.7 Frequency Setting and Basic Operation ..... 4-1
**CHAPTER 5 - Function list ..... 5-1**
**CHAPTER 6 - CONTROL BLOCK DIAGRAM ..... 6-1**
6.1 Frequency setting ..... 6-2
6.2 Drive command setting ..... 6-4
6.3 Accel/Decel setting and V/F control ..... 6-5
**CHAPTER 7 - Basic Functions ..... 7-1**
7.1 Frequency mode ..... 7-1
7.2 Multi-Step Frequency setting ..... 7-7
7.3 Operating command setting method ..... 7-8
7.4 Accel/Decel time and pattern setting ..... 7-12
7.5 V/F control ..... 7-17
7.6 Stop method select ..... 7-20
7.7 Frequency limit ..... 7-21
**CHAPTER 8 - Advanced functions ..... 8-1**
8.1 DC brake ..... 8-1
8.2 Jog operation ..... 8-3
8.3 UP-DOWN Drive ..... 8-4

8.4 3-Wire ..... 8-7
8.5 Dwell operation ..... 8-7
8.6 Slip compensation ..... 8-8
8.7 PID control ..... 8-9
8.8 Auto-tuning ..... 8-13
8.9 Sensorless Vector Control ..... 8-14
8.10 Energy-saving operation ..... 8-15
8.11 Speed search ..... 8-16
8.12 Auto restart try ..... 8-18
8.13 Operating sound select (Carrier frequency change) ..... 8-19
8.14 2nd motor operation ..... 8-19
8.15 Self-Diagnostic function ..... 8-21
8.16 Frequency setting and 2nd drive method select ..... 8-22
8.17 Over voltage trip prevention deceleration and Power Braking ..... 8-24
8.18 External brake control ..... 8-24
8.19 Kinetic energy buffering ..... 8-26
8.20 DRAW drive ..... 8-26
8.21 2 Phase PWM drive ..... 8-28
8.22 Cooling fan control ..... 8-28
8.23 Operating mode select when cooling fan trip occurs ..... 8-28
8.24 Parameter read/write ..... 8-30
8.25 Parameter Initialize / Lock ..... 8-31
**CHAPTER 9 - Monitoring ..... 9-33**
9.1 Operating status monitoring ..... 9-33
9.2 Monitoring the I/O terminal ..... 9-35
9.3 Monitoring fault condition ..... 9-36
9.4 Analog Output ..... 9-38
9.5 Multi-function output terminal (MO) and Relay (3AC) ..... 9-39
9.6 Output terminal select at loder communication error ..... 9-44
**CHAPTER 10 - Protective functions ..... 10-1**
10.1 Electronic Thermal ..... 10-1
10.2 Overload Warning and trip ..... 10-2
10.3 Stall prevention ..... 10-3
10.4 Output phase loss protection ..... 10-5
10.5 External trip signal ..... 10-5
10.6 Inverter Overload ..... 10-6
10.7 Speed command loss ..... 10-6
10.8 DB Resistor Enable Duty setting ..... 10-7
**CHAPTER 11 - RS485 communication ..... 11-1**
11.1 Introduction ..... 11-1
11.2 Specification ..... 11-1
11.3 Installation ..... 11-2

11.4 Operation ..... 11-3
11.5 Communication protocol (MODBUS-RTU) ..... 11-4
11.6 Communication protocol (LS BUS) ..... 11-4
11.7 Parameter code list <Common area> ..... 11-8
11.8 Troubleshooting ..... 11-11
11.9 Miscellaneous ..... 11-11
**CHAPTER 12 - Troubleshooting & Maintenance ..... 12-1**
12.1 Protective functions ..... 12-1
12.2 Fault remedy ..... 12-3
12.3 Precautions for maintenance and inspection ..... 12-6
12.4Check points ..... 12-6
12.5 Part replacements ..... 12-6
**CHAPTER 13 - Specifications ..... 1**
13.1 Technical data ..... 1
13.2 Temperature Derating Information ..... 4
13.3 Remote option ..... 4
13.4 Conduit Kit ..... 6
13.5 EMC filter ..... 8
13.6 Braking resistor ..... 8
**DECLARATION OF CONFORMITY ..... i**

# CHAPTER 1 - BASIC INFORMATION & PRECAUTIONS

## 1.1Important precautions

**Unpacking and inspection**

- Inspect the inverter for any damage that may have occurred during shipping. To verify the inverter unit is the correct one for the application you need, check the inverter type, output ratings on the nameplate and the inverter is intact.

| SV | 075 | | iG5A | - | 2 | | (N) |
|---|---|---|---|---|---|---|---|
| | Motor rating | | Series Name | | Input power | | Keypad |
| LS Inverter | 004 | 0.4 [kW] | iG5A | | 1 | Single Phase 200~230[V] | NON loader I/O Products |
| | 008 | 0.75 [kW] | | | | | |
| | 015 | 1.5 [kW] | | | | | |
| | 022 | 2.2 [kW] | | | | | |
| | 037 | 3.7 [kW] | | | 2 | Three Phase 200~230[V] | |
| | 040 | 4.0 [kW] | | | | | |
| | 055 | 5.5 [kW] | | | | | |
| | 075 | 7.5 [kW] | | | | | |
| | 110 | 11.0[kW] | | | 4 | Three Phase 380~480[V] | |
| | 150 | 15.0[kW] | | | | | |
| | 185 | 18.5[kW] | | | | | |
| | 220 | 22.0[kW] | | | | | |

- Accessories

If you have found any discrepancy, damage, etc., contact your sales representative.

**Preparations of instruments and parts required for operation**

Instruments and parts to be prepared depend on how the inverter is operated. Prepare equipment and parts as necessary.

**Installation**

To operate the inverter with high performance for a long time, install the inverter in a proper place in the correct direction and with proper clearances

**Wiring**

Connect the power supply, motor and operation signals (control signals) to the terminal block. Note that incorrect connection may damage the inverter and peripheral devices

## 1.2 Product Details

- Appearance

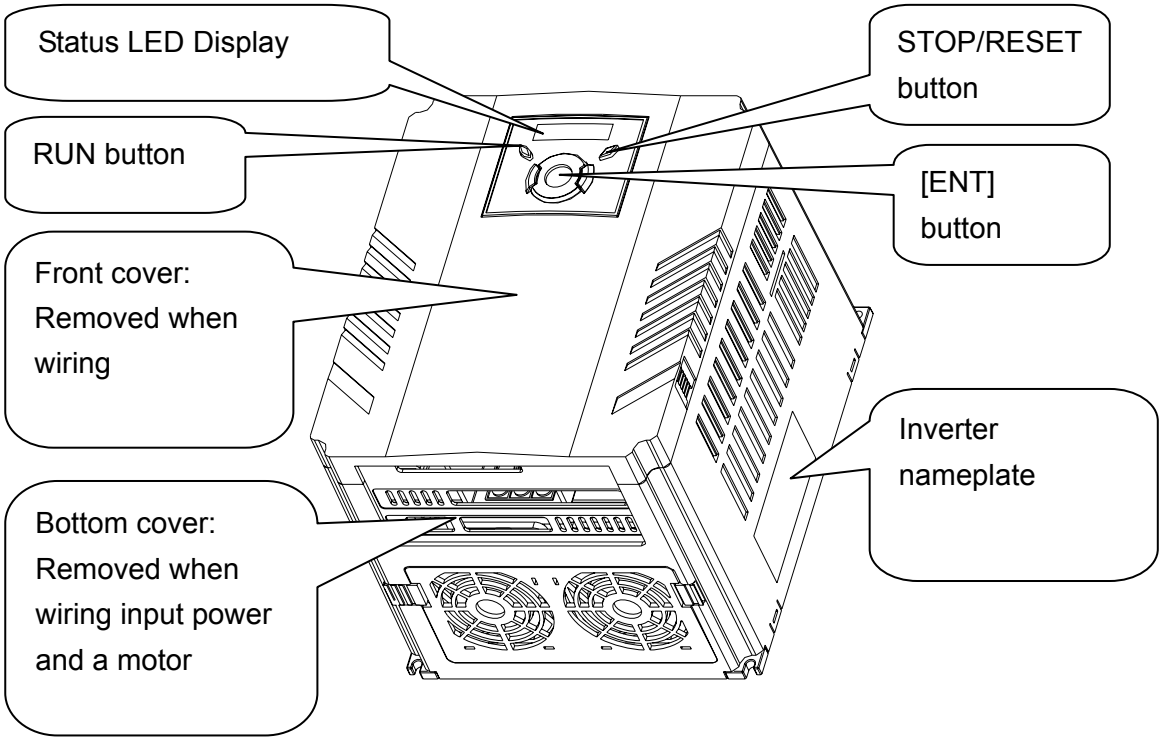


- Inside view after front cover is removed
  Refer to “1.3 front cover removal” for details.

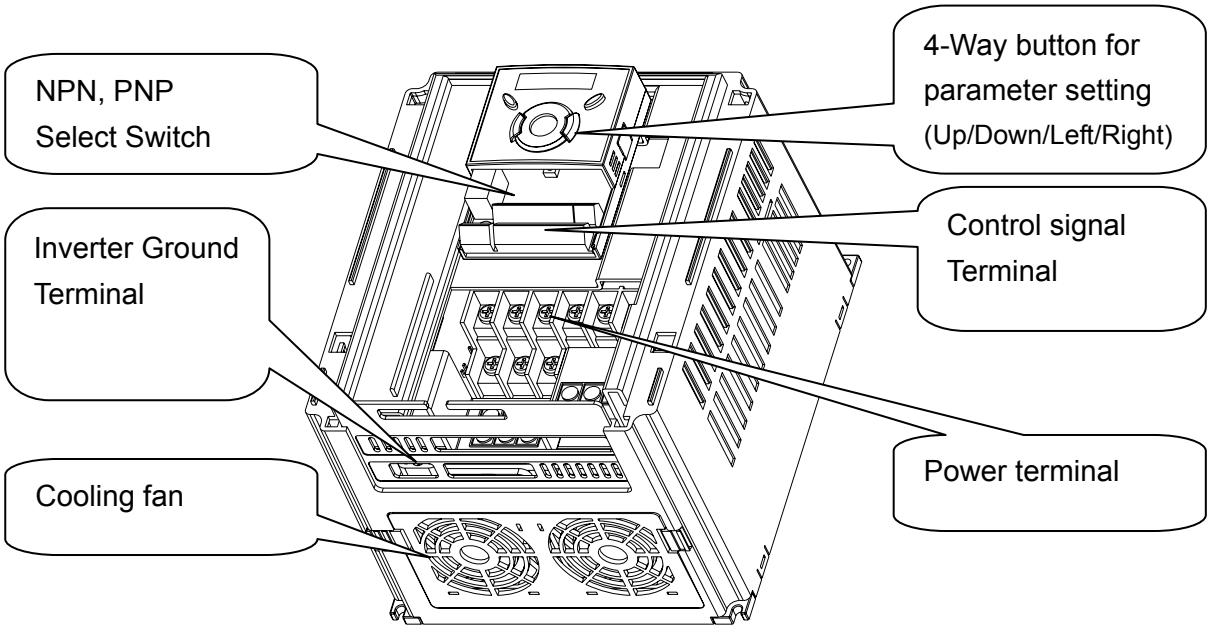

## 1.3 Product assembling & disassembling

- To remove the front cover: Press the both indented sides of the cover lightly and pull up.

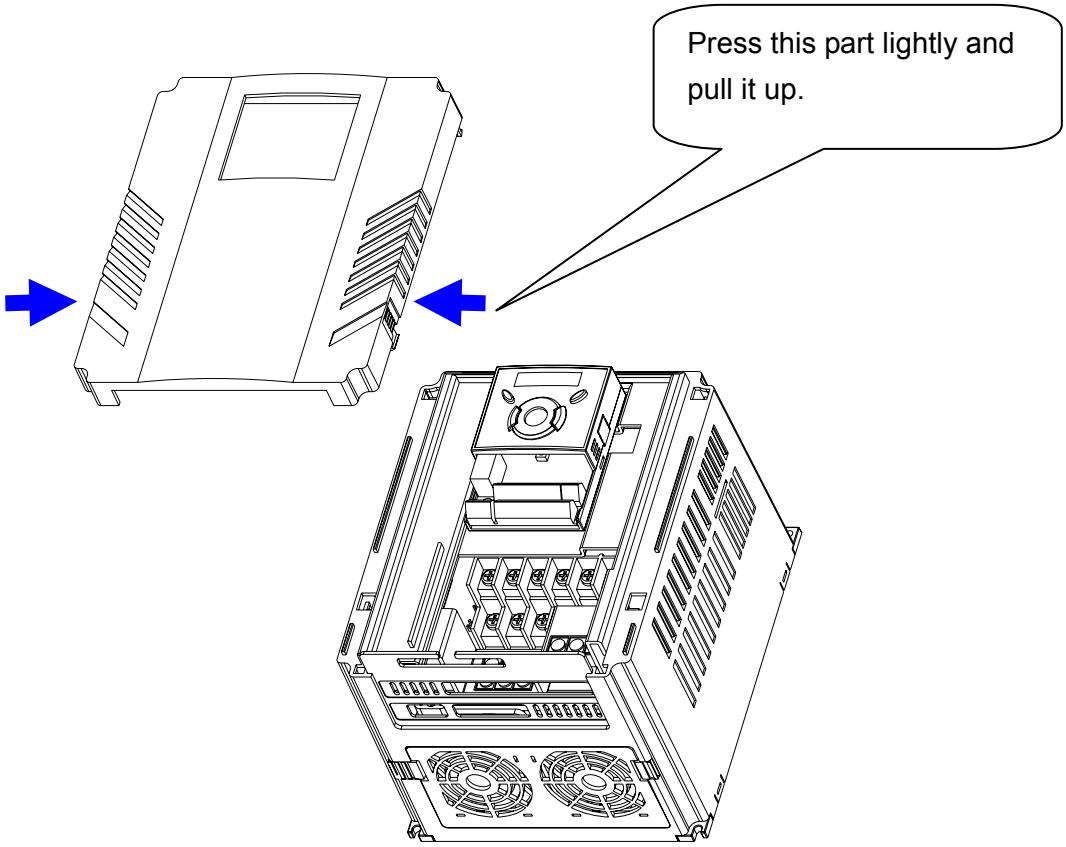


- To change the inverter fan: Press the both sides of bottom cover lightly and pull out to your side.

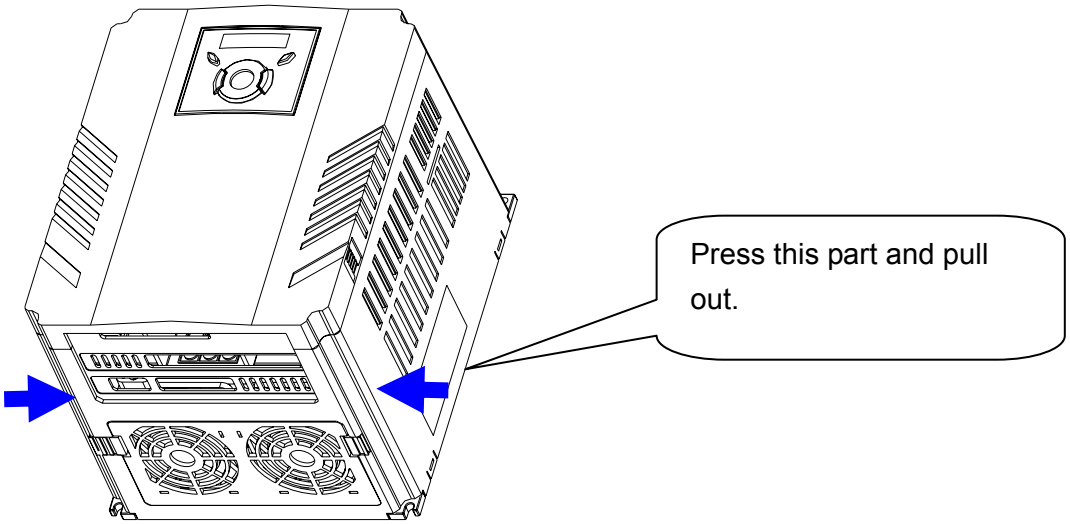

# CHAPTER 2 - INSTALLATION & WIRING

## 2.1 Installation precautions

**⚠ CAUTION**

- Handle the inverter with care to prevent damage to the plastic components. Do not hold the inverter by the front cover. It may fall off.
- Install the inverter in a place where it is immune to vibration (5.9 $m/s^2$ or less).
- Install in a location where temperature is within the permissible range (-10~50°C).

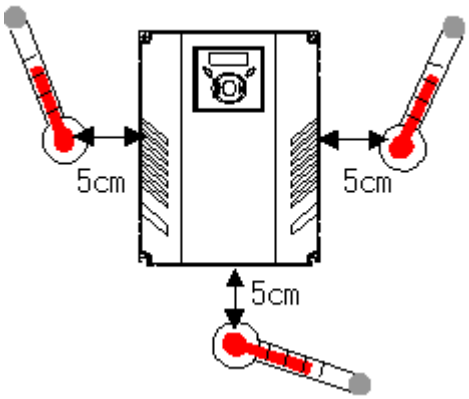


<Ambient Temp Checking Location>

- The inverter will be very hot during operation. Install it on a non-combustible surface.
- Mount the inverter on a flat, vertical and level surface. Inverter orientation must be vertical (top up) for proper heat dissipation. Also leave sufficient clearances around the inverter.

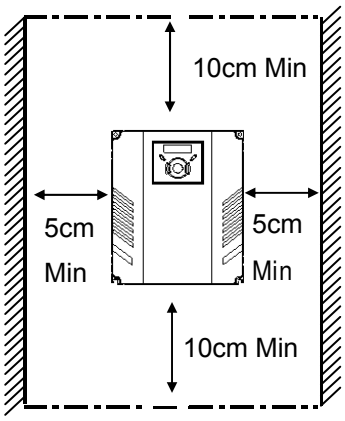


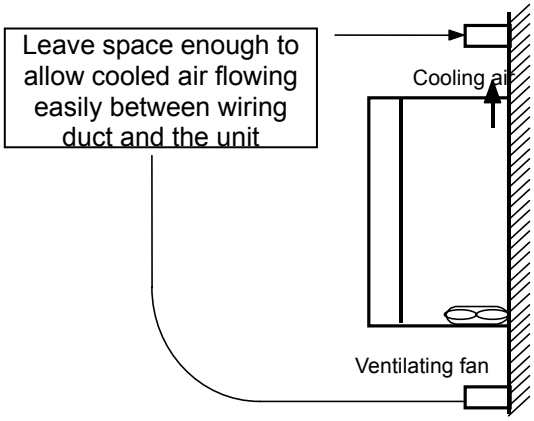


- Protect from moisture and direct sunlight.
- Do not install the inverter in any environment where it is exposed to waterdrops, oil mist, dust, etc. Install the inverter in a clean place or inside a “totally enclosed” panel any suspended matter is not entered.

- When two or more inverters are installed or a cooling fan is mounted in a panel, the inverters and fan must be installed in proper positions with extreme care to keep the ambient temperature below the permissible range.
- Installed the inverter using screws or bolts to insure the inverter is firmly fastened.

< For installing multiple inverters in a panel>

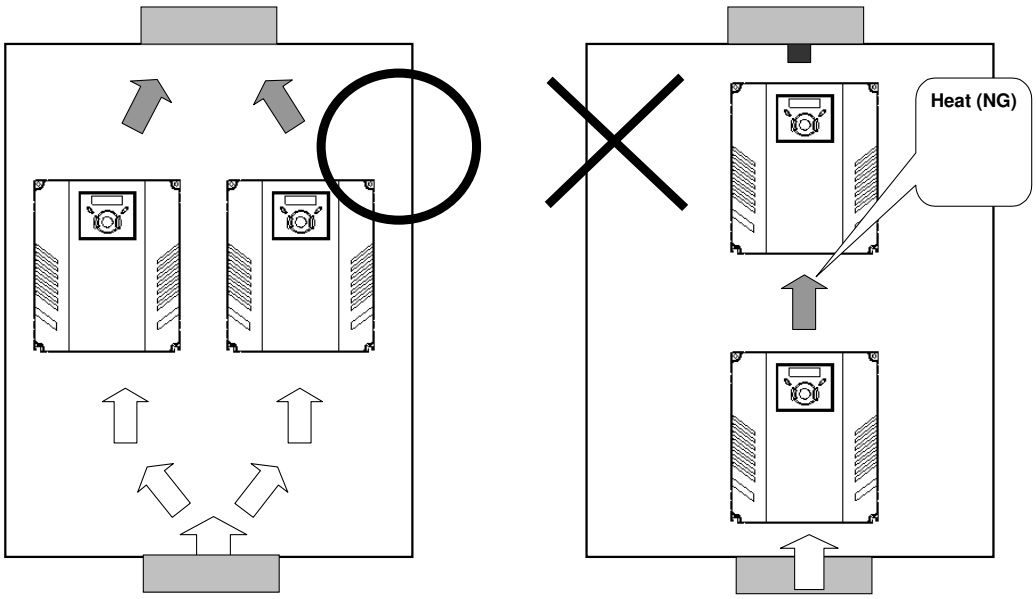


| ⚠ CAUTION |
| --- |
| Take caution on proper heat ventilation when installing inverters and fans in a panel. |

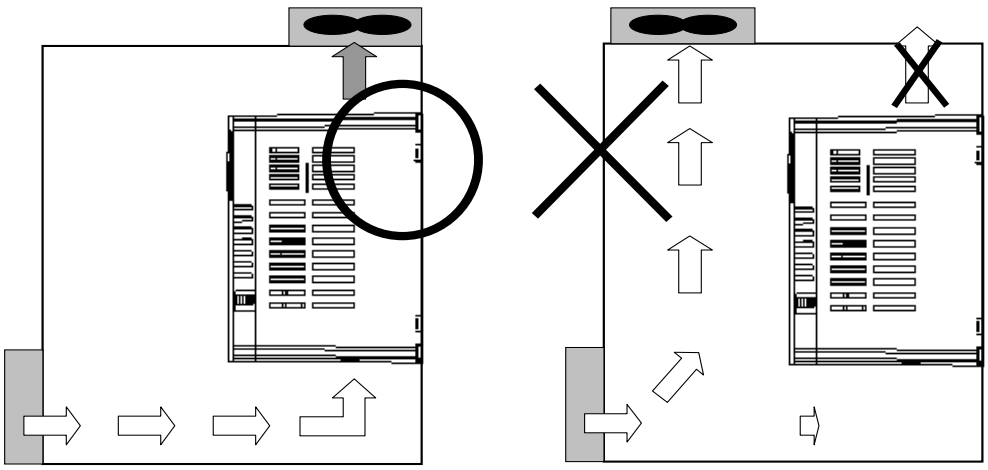

## 2.2 Dimensions

SV004IG5A-1
SV004iG5A-2 / SV008iG5A-2
SV004iG5A-4 / SV008iG5A-4

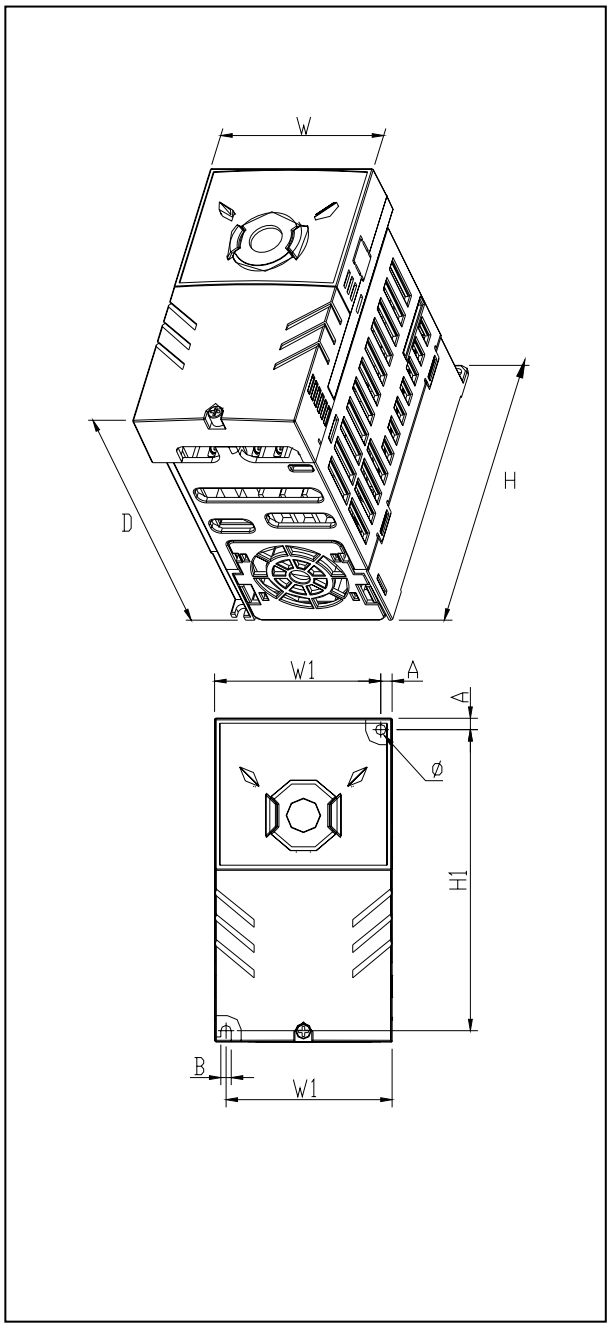


SV008IG5A-1
SV015iG5A-2 / SV015iG5A-4

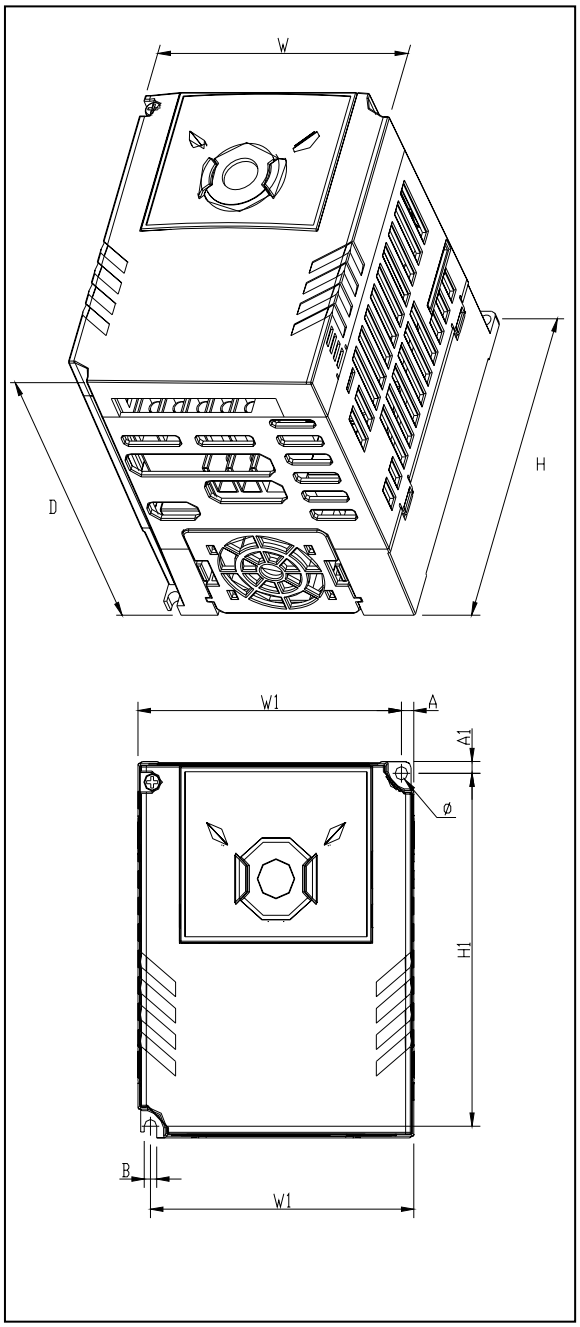

SV015IG5A-1

SV022iG5A-2 / SV037iG5A-2 / SV040iG5A-2

SV022iG5A-4 / SV037iG5A-4 / SV040iG5A-4

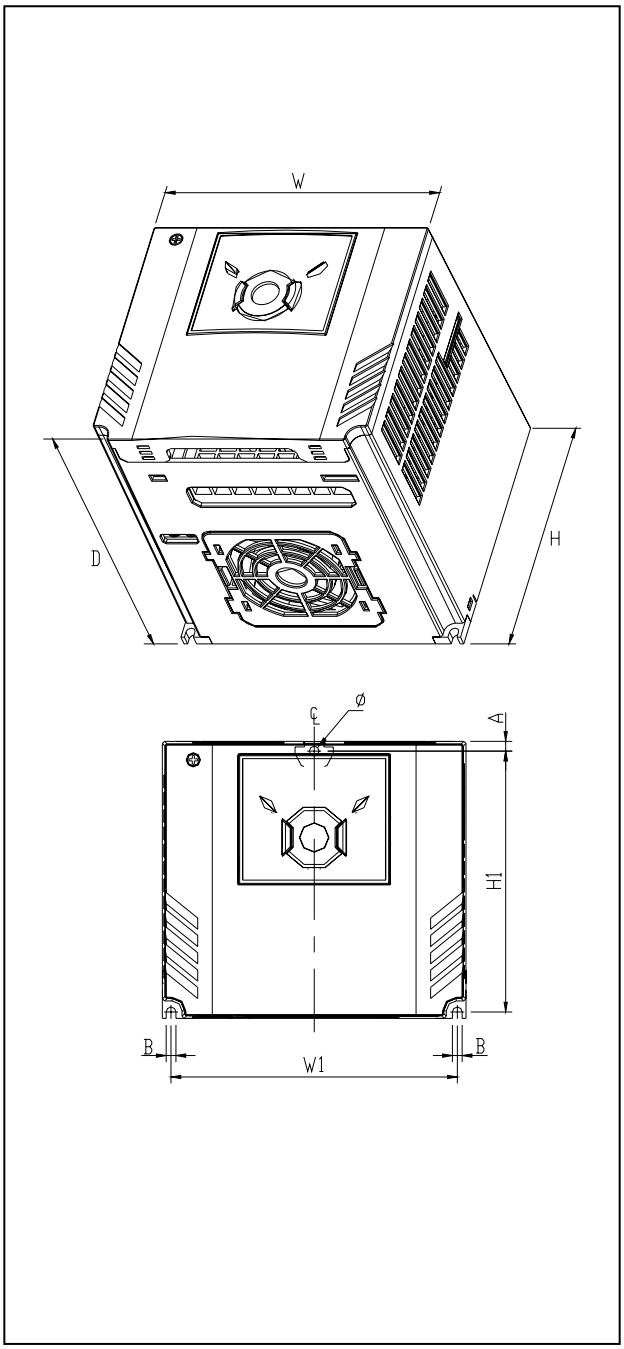


SV055iG5A-2 / SV075iG5A-2

SV055iG5A-4 / SV075iG5A-4

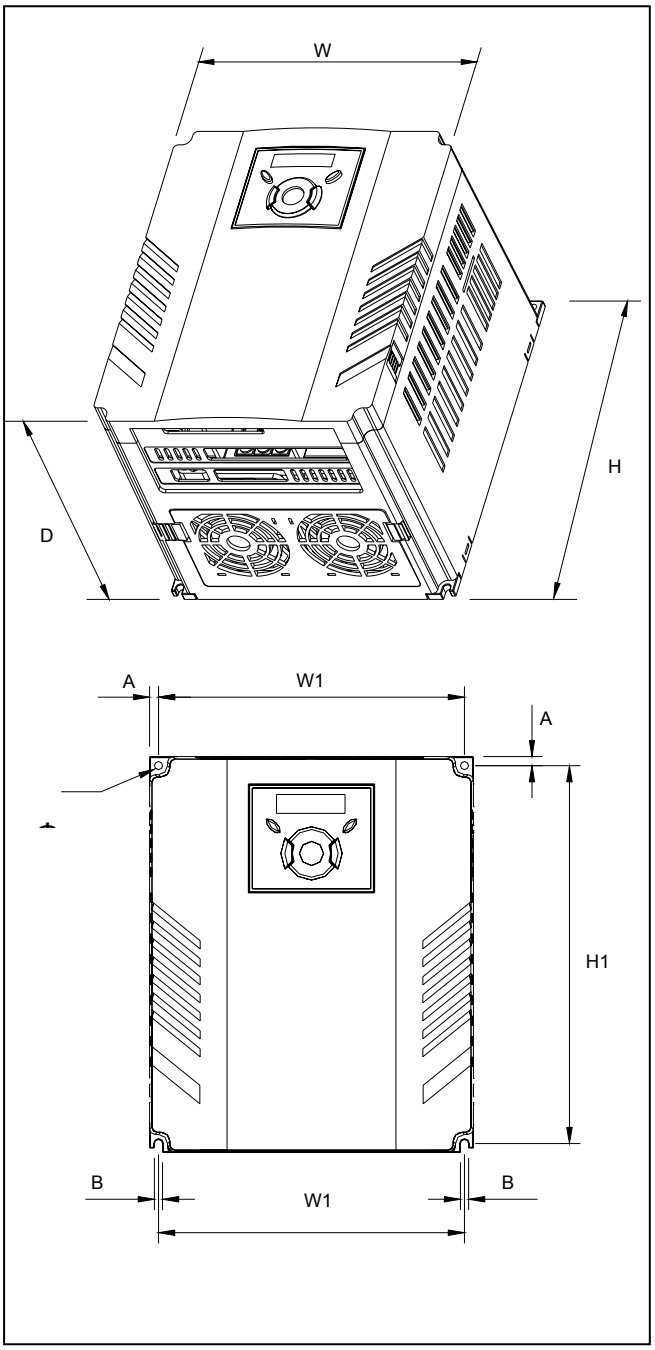

SV110iG5A-2 /SV150iG5A-2
SV110iG5A-4 / SV150iG5A-4

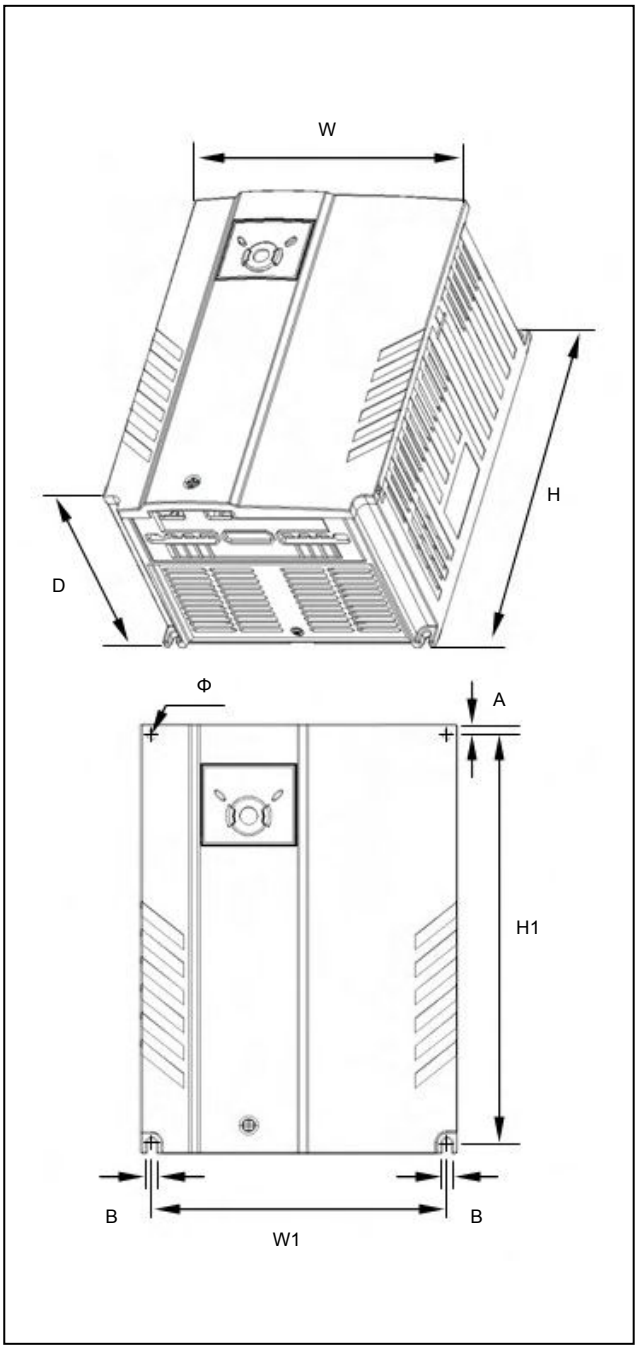


SV185iG5A-2 / SV220iG5A-2
SV185iG5A-4 / SV220iG5A-4

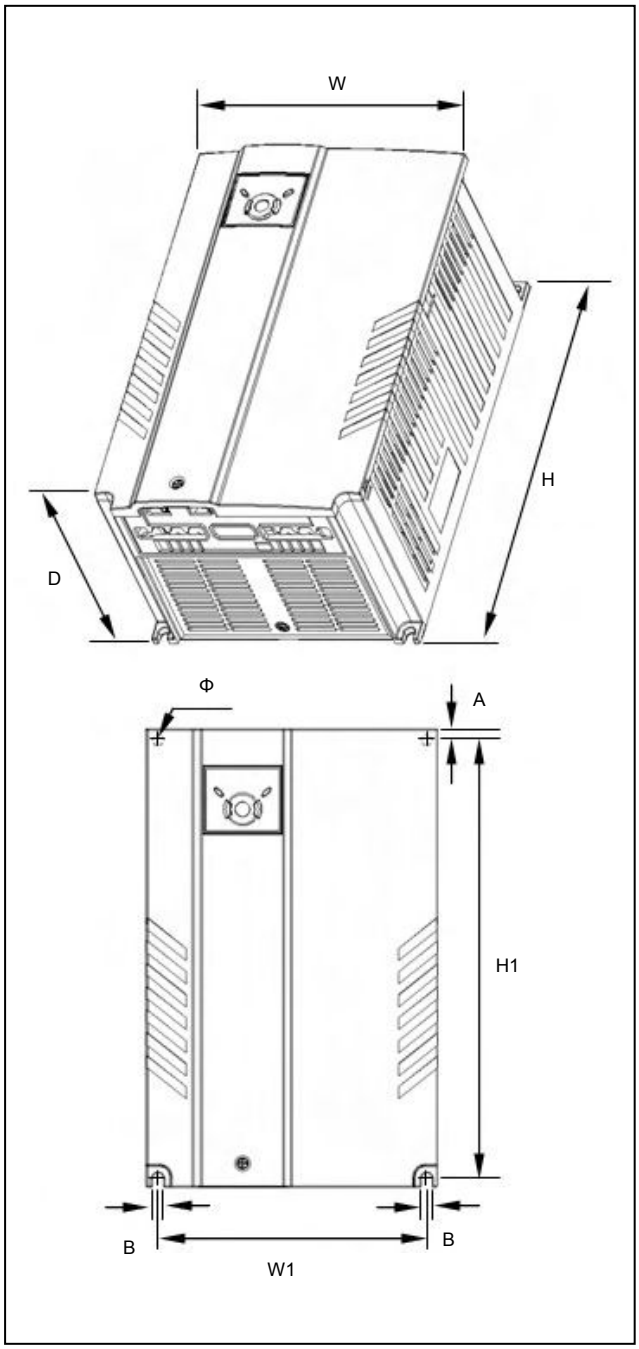

| Inverter | [kW] | W [mm] | W1 [mm] | H [mm] | H1 [mm] | D [mm] | Φ | A [mm] | B [mm] | [Kg] |
|---|---|---|---|---|---|---|---|---|---|---|
| SV004IG5A-1 | 0.4 | 70 | 65.5 | 128 | 119 | 130 | 4.0 | 4.5 | 4.0 | 0.76 |
| SV008IG5A-1 | 0.75 | 100 | 95.5 | 128 | 120 | 130 | 4.5 | 4.5 | 4.5 | 1.12 |
| SV015IG5A-1 | 1.5 | 140 | 132 | 128 | 120.5 | 155 | 4.5 | 4.5 | 4.5 | 1.84 |
| SV004IG5A-2 | 0.4 | 70 | 65.5 | 128 | 119 | 130 | 4.0 | 4.5 | 4.0 | 0.76 |
| SV008IG5A-2 | 0.75 | 70 | 65.5 | 128 | 119 | 130 | 4.0 | 4.5 | 4.0 | 0.77 |
| SV015IG5A-2 | 1.5 | 100 | 95.5 | 128 | 120 | 130 | 4.5 | 4.5 | 4.5 | 1.12 |
| SV022IG5A-2 | 2.2 | 140 | 132 | 128 | 120.5 | 155 | 4.5 | 4.5 | 4.5 | 1.84 |
| SV037IG5A-2 | 3.7 | 140 | 132 | 128 | 120.5 | 155 | 4.5 | 4.5 | 4.5 | 1.89 |
| SV040IG5A-2 | 4.0 | 140 | 132 | 128 | 120.5 | 155 | 4.5 | 4.5 | 4.5 | 1.89 |
| SV055iG5A-2 | 5.5 | 180 | 170 | 220 | 210 | 170 | 4.5 | 5.0 | 4.5 | 3.66 |
| SV075iG5A-2 | 7.5 | 180 | 170 | 220 | 210 | 170 | 4.5 | 5.0 | 4.5 | 3.66 |
| SV110iG5A-2 | 11.0 | 235 | 219 | 320 | 304 | 189.5 | 7.0 | 8.0 | 7.0 | 9.00 |
| SV150iG5A-2 | 15.0 | 235 | 219 | 320 | 304 | 189.5 | 7.0 | 8.0 | 7.0 | 9.00 |
| SV185iG5A-2 | 18.5 | 260 | 240 | 410 | 392 | 208.5 | 10.0 | 10.0 | 10.0 | 13.3 |
| SV220iG5A-2 | 22.0 | 260 | 240 | 410 | 392 | 208.5 | 10.0 | 10.0 | 10.0 | 13.3 |
| SV004IG5A-4 | 0.4 | 70 | 65.5 | 128 | 119 | 130 | 4.0 | 4.5 | 4.0 | 0.76 |
| SV008IG5A-4 | 0.75 | 70 | 65.5 | 128 | 119 | 130 | 4.0 | 4.5 | 4.0 | 0.77 |
| SV015IG5A-4 | 1.5 | 100 | 95.5 | 128 | 120 | 130 | 4.5 | 4.5 | 4.5 | 1.12 |
| SV022IG5A-4 | 2.2 | 140 | 132 | 128 | 120.5 | 155 | 4.5 | 4.5 | 4.5 | 1.84 |
| SV037IG5A-4 | 3.7 | 140 | 132 | 128 | 120.5 | 155 | 4.5 | 4.5 | 4.5 | 1.89 |
| SV040IG5A-4 | 4.0 | 140 | 132 | 128 | 120.5 | 155 | 4.5 | 4.5 | 4.5 | 1.89 |
| SV055iG5A-4 | 5.5 | 180 | 170 | 220 | 210 | 170 | 4.5 | 5.0 | 4.5 | 3.66 |
| SV075iG5A-4 | 7.5 | 180 | 170 | 220 | 210 | 170 | 4.5 | 5.0 | 4.5 | 3.66 |
| SV110iG5A-4 | 11.0 | 235 | 219 | 320 | 304 | 189.5 | 7.0 | 8.0 | 7.0 | 9.00 |
| SV150iG5A-4 | 15.0 | 235 | 219 | 320 | 304 | 189.5 | 7.0 | 8.0 | 7.0 | 9.00 |
| SV185iG5A-4 | 18.5 | 260 | 240 | 410 | 392 | 208.5 | 10.0 | 10.0 | 10.0 | 13.3 |
| SV220iG5A-4 | 22.0 | 260 | 240 | 410 | 392 | 208.5 | 10.0 | 10.0 | 10.0 | 13.3 |

## 2.3 Terminal wiring (Control I/O)

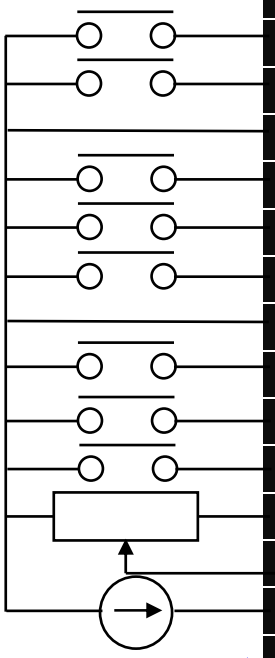

| T/M | Description | |
|---|---|---|
| MO | Multi-function open collector output | |
| MG | MO Common | |
| 24 | 24V output | |
| P1 | MF input terminal (factory setting) | FX: Forward run |
| P2 | | RX: Reverse run |
| CM | Input signal common | |
| P3 | MF input terminal (factory setting) | BX: Emergency stop |
| P4 | | RST: Trip reset |
| P5 | | JOG: Jog operation |
| CM | Input signal common | |
| P6 | MF input terminal (factory setting) | Multi-step freq.-Low |
| P7 | | Multi-step freq.-Middle |
| P8 | | Multi-step freq.-High |
| VR | 10V power supply for potentiometer | |
| V1 | Freq. Setting Voltage signal input: -0~10V | |
| I | Freq. Setting Current signal input: 0~20mA | |
| AM | Multi-function analog output signal: 0~10V | |
| 3A | Multi-function relay output terminal | A contact output |
| 3B | | B contact output |
| 3C | | A/B contact common |
| S+ | RS485 communication terminal | |
| S- | | |

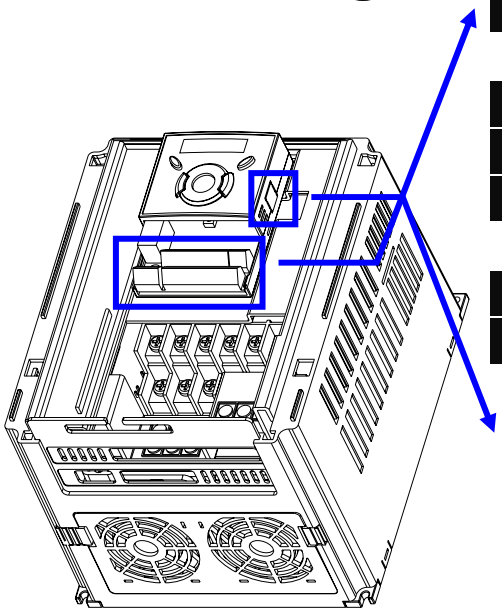

※ For connection to Remote Option or parameter copying

* Power terminal wiring (0.4 ~ 7.5kW)

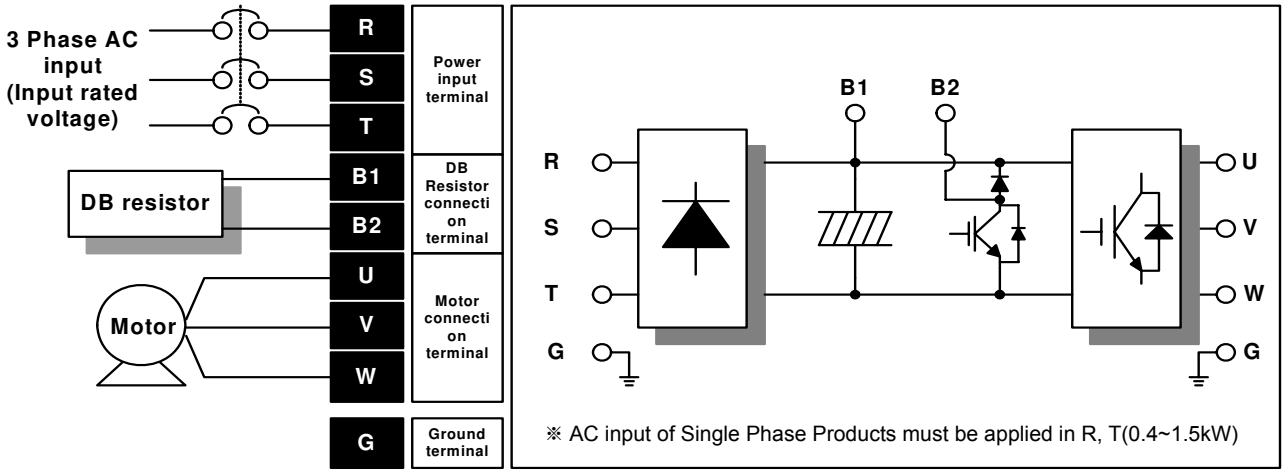


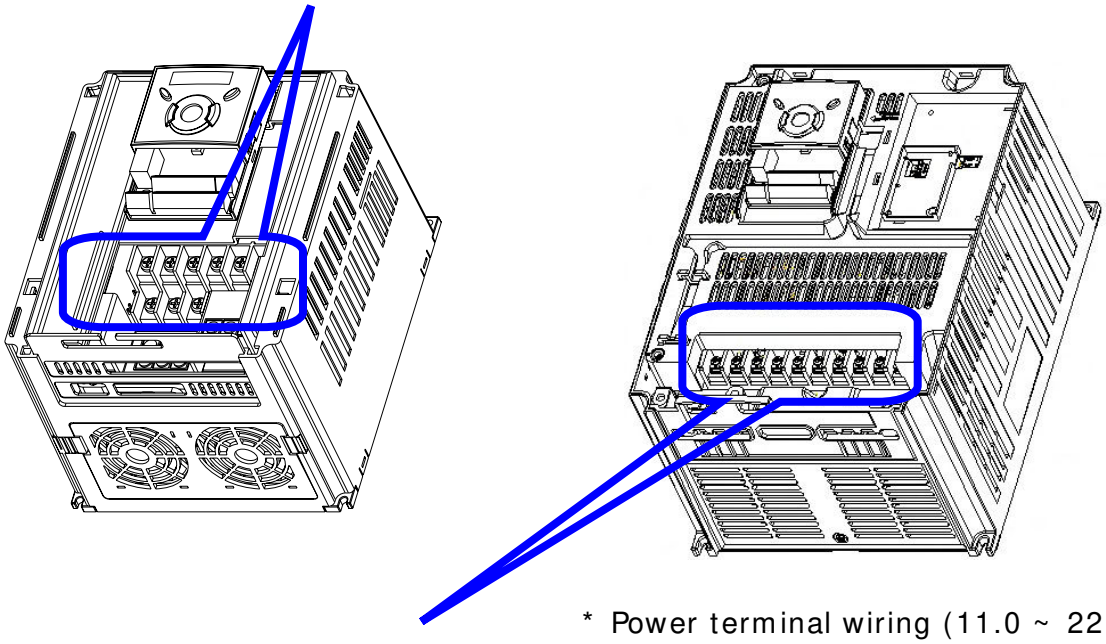

* Power terminal wiring (11.0 ~ 22.0kW)

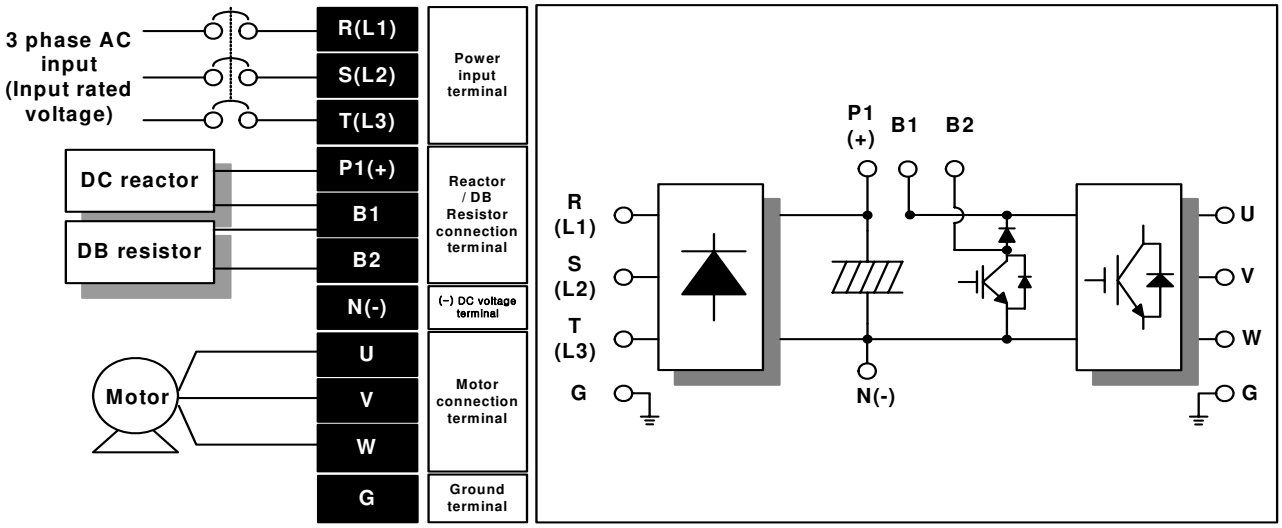

## 2.4 Specifications for power terminal block wiring

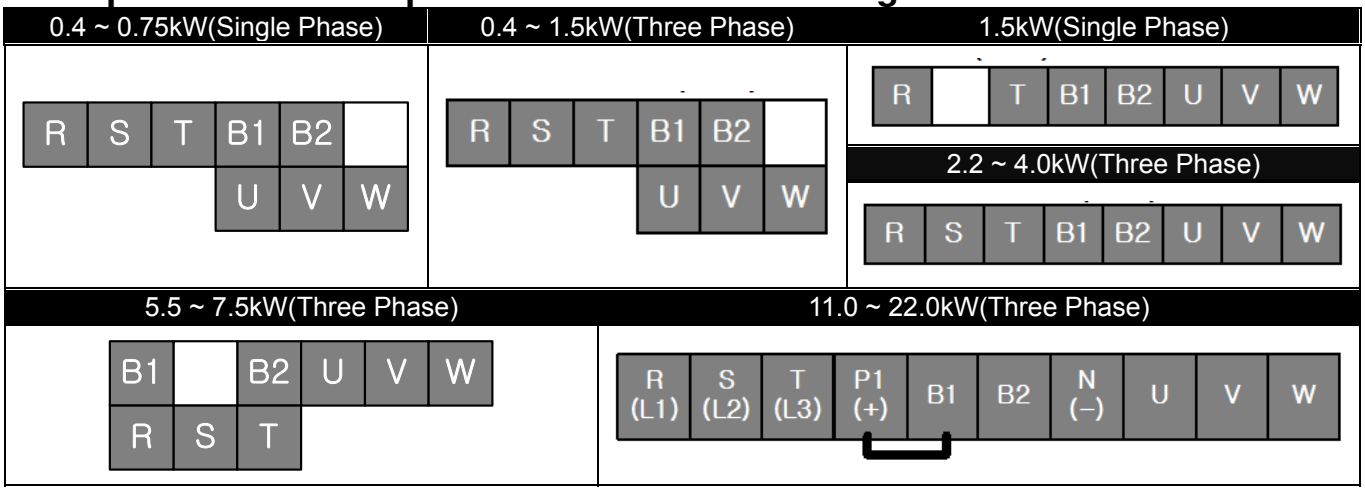


| | R,S,T Size | | U,V,W Size | | Ground Size | | Terminal Screw Size | Screw Torque (Kgf.cm)/lb-in |
|---|---|---|---|---|---|---|---|---|
| | $mm^2$ | AWG | $mm^2$ | AWG | $mm^2$ | AWG | | |
| SV004iG5A-1 | 2 | 14 | 2 | 14 | 3.5 | 12 | M3.5 | 10/8.7 |
| SV008iG5A-1 | 2 | 14 | 2 | 14 | 3.5 | 12 | M3.5 | 10/8.7 |
| SV015iG5A-1 | 2 | 14 | 2 | 14 | 3.5 | 12 | M4 | 15/13 |
| SV004iG5A-2 | 2 | 14 | 2 | 14 | 3.5 | 12 | M3.5 | 10/8.7 |
| SV008iG5A-2 | 2 | 14 | 2 | 14 | 3.5 | 12 | M3.5 | 10/8.7 |
| SV015iG5A-2 | 2 | 14 | 2 | 14 | 3.5 | 12 | M3.5 | 10/8.7 |
| SV022iG5A-2 | 2 | 14 | 2 | 14 | 3.5 | 12 | M4 | 15/13 |
| SV037iG5A-2 | 3.5 | 12 | 3.5 | 12 | 3.5 | 12 | M4 | 15/13 |
| SV040iG5A-2 | 3.5 | 12 | 3.5 | 12 | 3.5 | 12 | M4 | 15/13 |
| SV055iG5A-2 | 5.5 | 10 | 5.5 | 10 | 5.5 | 10 | M5 | 32/28 |
| SV075iG5A-2 | 8 | 8 | 8 | 8 | 5.5 | 10 | M5 | 32/28 |
| SV110iG5A-2 | 14 | 6 | 14 | 6 | 14 | 6 | M6 | 30.7/26.6 |
| SV150iG5A-2 | 22 | 4 | 22 | 4 | 14 | 6 | M6 | 30.7/26.6 |
| SV185iG5A-2 | 30 | 2 | 30 | 2 | 22 | 4 | M8 | 30.6/26.5 |
| SV220iG5A-2 | 38 | 2 | 30 | 2 | 22 | 4 | M8 | 30.6/26.5 |
| SV004iG5A-4 | 2 | 14 | 2 | 14 | 2 | 14 | M3.5 | 10/8.7 |
| SV008iG5A-4 | 2 | 14 | 2 | 14 | 2 | 14 | M3.5 | 10/8.7 |
| SV015iG5A-4 | 2 | 14 | 2 | 14 | 2 | 14 | M4 | 15/13 |
| SV022iG5A-4 | 2 | 14 | 2 | 14 | 2 | 14 | M4 | 15/13 |
| SV037iG5A-4 | 2 | 14 | 2 | 14 | 2 | 14 | M4 | 15/13 |
| SV040iG5A-4 | 2 | 14 | 2 | 14 | 2 | 14 | M4 | 15/13 |
| SV055iG5A-4 | 3.5 | 12 | 2 | 14 | 3.5 | 12 | M5 | 32/28 |
| SV075iG5A-4 | 3.5 | 12 | 3.5 | 12 | 3.5 | 12 | M5 | 32/28 |
| SV110iG5A-4 | 5.5 | 10 | 5.5 | 10 | 8 | 8 | M5 | 30.7/26.6 |
| SV150iG5A-4 | 14 | 6 | 8 | 8 | 8 | 8 | M5 | 30.7/26.6 |
| SV185iG5A-4 | 14 | 6 | 8 | 8 | 14 | 6 | M6 | 30.6/26.5 |
| SV220iG5A-4 | 22 | 4 | 14 | 6 | 14 | 6 | M6 | 30.6/26.5 |

* Strip the sheaths of the wire insulation 7mm when a ring terminal is not used for power connection.

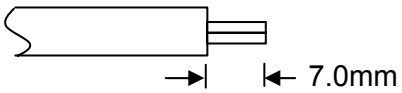


*SV185iG5A-2 and SV220iG5A-2 must use Ring or Fork Terminal certainly approved by UL.

## ⚠ CAUTION

- Apply the rated torque to terminal screws. Loosen screws can cause of short circuit and malfunction. Tightening the screw too much can damage the terminals and cause short circuit and malfunction.
- Use copper wires only with 600V, 75℃ ratings for wiring.
- Make sure the input power is off before wiring.
- When power supply is switched off following operation, wait at least 10 minutes after LED keypad display is off before you start working on it.
- Applying input power supply to the output terminals U, V and W causes internal inverter damage.
- Use ring terminals with insulated caps when wiring the input power and motor wiring.
- Do not leave wire fragments inside the inverter. Wire fragments can cause faults, breakdowns and malfunctions.
- When more than one motor is connected to one inverter, total wire length should be less than 200m (656ft). Do not use a 3-wire cable for long distances. Due to increased leakage capacitance between wires, over-current protective feature may operate or equipment connected to the output side may malfunction. In case of long wire length, it should be required to lower carrier frequency or use Micro Surge Filter.

| Length between Inverter and Motor | Up to 50m | Up to 100m | More than 100m |
|---|---|---|---|
| Allowable Carrier Frequency | Less than 15kHz | Less than 5kHz | Less than 2.5kHz |

(For products of less than 3.7kW, the wire length should be less than 100m(328ft)).

- Never short B1 and B2 terminals. Shorting terminals may cause internal inverter damage.
- Do not install a power factor capacitor, surge suppressor or RFI filters in the output side of the inverter. Doing so may damage these components.

**[WARNING]**
**Power supply must be connected to the R, S, and T Terminals.**
Connecting it to the U, V, W terminals causes internal damages to the inverter. Arranging the phase sequence is not necessary.
**Motor should be connected to the U, V, and W Terminals.**
If the forward command (FX) is on, the motor should rotate counter clockwise when viewed from the load side of the motor. If the motor rotates in the reverse, switch the U and V terminals.

## ⚠ WARNING

- Use the Type 3 grounding method (Ground impedance: Below 100Ω) for 230V class inverters.
- Use the Special Type 3 grounding method (Ground impedance: Below 10Ω) for 460V class inverters.
- Use the dedicated ground terminal to ground the inverter. Do not use the screw in the case or chassis, etc for grounding.

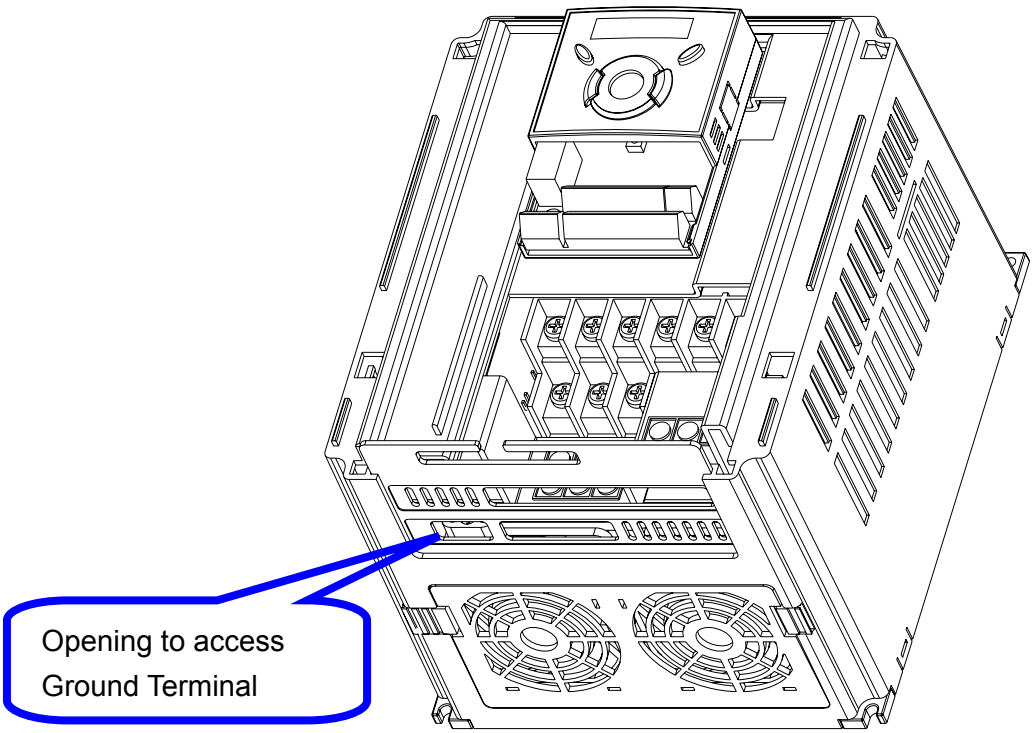


**Note**

Grounding procedure

1) Remove the front cover.
2) Connect the Grounding wire to the ground terminal through the opening for ground terminal as shown above. Enter the screw driver from vertical to the terminal and secure the screw tightly.

**Note** Grounding work guidance

| Inverter capacity | 200V Class | | | 400V Class | | |
|---|---|---|---|---|---|---|
| | Wire size | Terminal screw | Wire size | Terminal screw | Wire size | Terminal screw |
| 0.4~4.0 kW | 3.5 $mm^2$ | M3 | Type 3 | 2.0 $mm^2$ | M3 | Special Type 3 |
| 5.5~7.5 kW | 5.5 mm2 | M4 | | 3.5 mm2 | M4 | |
| 11 ~ 15 kW | 14.0 mm2 | M5 | | 8.0 mm2 | M5 | |
| 18.5~22 kW | 22.0 mm2 | M6 | | 14.0 mm2 | M5 | |

## 2.5 Control terminal specification

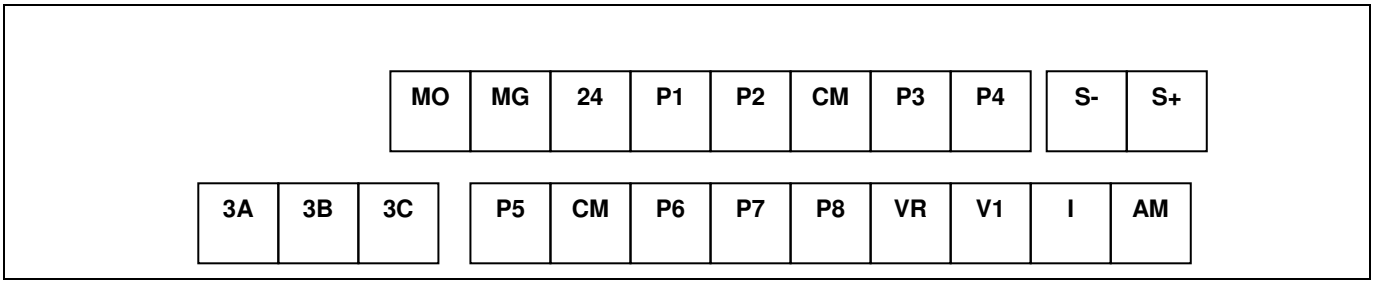


| T/M | Terminal Description | Wire size[mm$^2$] | | Screw size | Torque [Nm] | Specification |
|---|---|---|---|---|---|---|
| | | single wire | Stranded | | | |
| P1~P8 | Multi-function input T/M 1-8 | 1.0 | 1.5 | M2.6 | 0.4 | |
| CM | Common Terminal | 1.0 | 1.5 | M2.6 | 0.4 | |
| VR | Power supply for external potentiometer | 1.0 | 1.5 | M2.6 | 0.4 | Output voltage: 12V<br>Max output current: 10mA<br>Potentiometer:1 ~ 5kohm |
| V1 | Input terminal for Voltage operation | 1.0 | 1.5 | M2.6 | 0.4 | Max input voltage: -12V ~ +12V input |
| I | Input terminal for Current operation | 1.0 | 1.5 | M2.6 | 0.4 | 0 ~ 20mA input<br>Internal resistor: 250 ohm |
| AM | Multi-function analog output terminal | 1.0 | 1.5 | M2.6 | 0.4 | Max output voltage: 11[V]<br>Max output current: 10mA |
| MO | Multi-function terminal for open collector | 1.0 | 1.5 | M2.6 | 0.4 | Below DC 26V,100mA |
| MG | Ground terminal for external power supply | 1.0 | 1.5 | M2.6 | 0.4 | |
| 24 | 24V External Power Supply | 1.0 | 1.5 | M2.6 | 0.4 | Max output current: 100mA |
| 3A | Multi-function relay output A contact | 1.0 | 1.5 | M2.6 | 0.4 | Below AC 250V, 1A |
| 3B | Multi-function relay output B contact | 1.0 | 1.5 | M2.6 | 0.4 | Below DC 30V, 1A |
| 3C | Common for Multi-function relays | 1.0 | 1.5 | M2.6 | 0.4 | |

Note 1) Tie the control wires more than 15cm away from the control terminals. Otherwise, it interferes front cover reinstallation.

Note 2) Use Copper wires rated 600V, 75 ℃ and higher.

Note 3) Use the recommended tightening torque when securing terminal screws.

**Note**

When you use external power supply (24V) for multi-function input terminal (P1~P8), terminals will be active above 12V level. Take caution not to drop the voltage below 12V.

## 2.6 PNP/NPN selection and connector for communication option

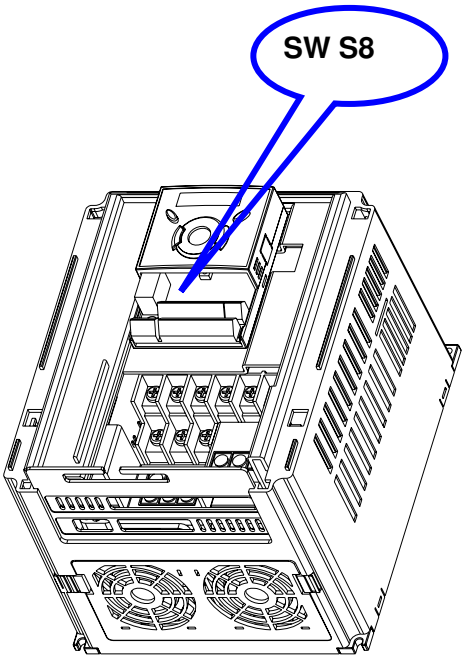


**1. When using DC 24V inside inverter [NPN]**

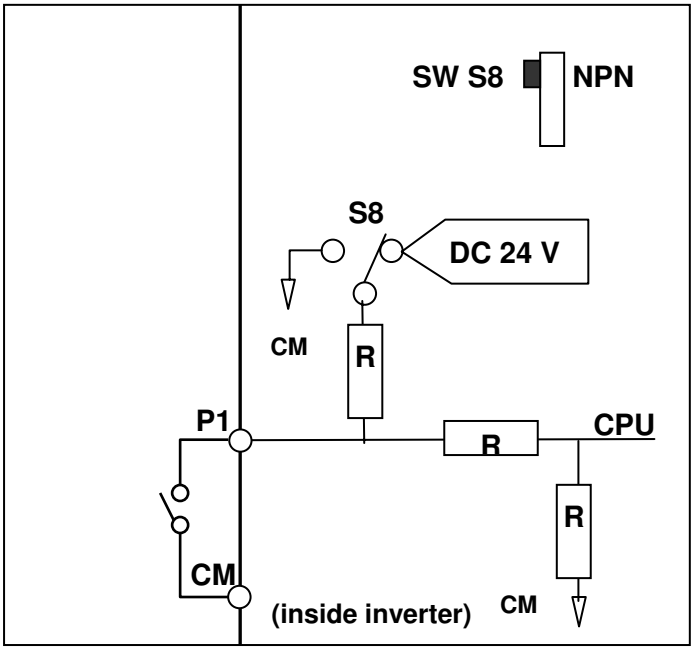


**2. When using external DC 24V [PNP]**

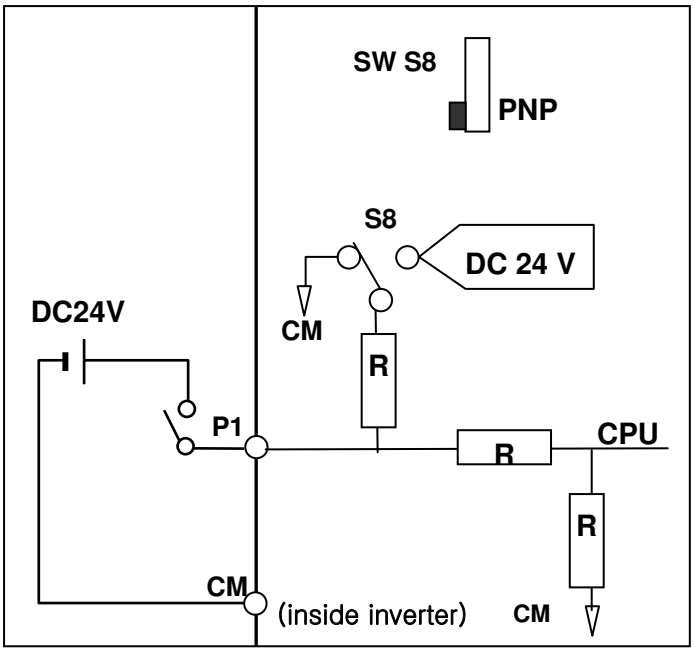

# CHAPTER 3 - BASIC CONFIGURATION

## 3.1 Connection of peripheral devices to the inverter

The following devices are required to operate the inverter. Proper peripheral devices must be selected and correct connections made to ensure proper operation. An incorrectly applied or installed inverter can result in system malfunction or reduction in product life as well as component damage. You must read and understand this manual thoroughly before proceeding.

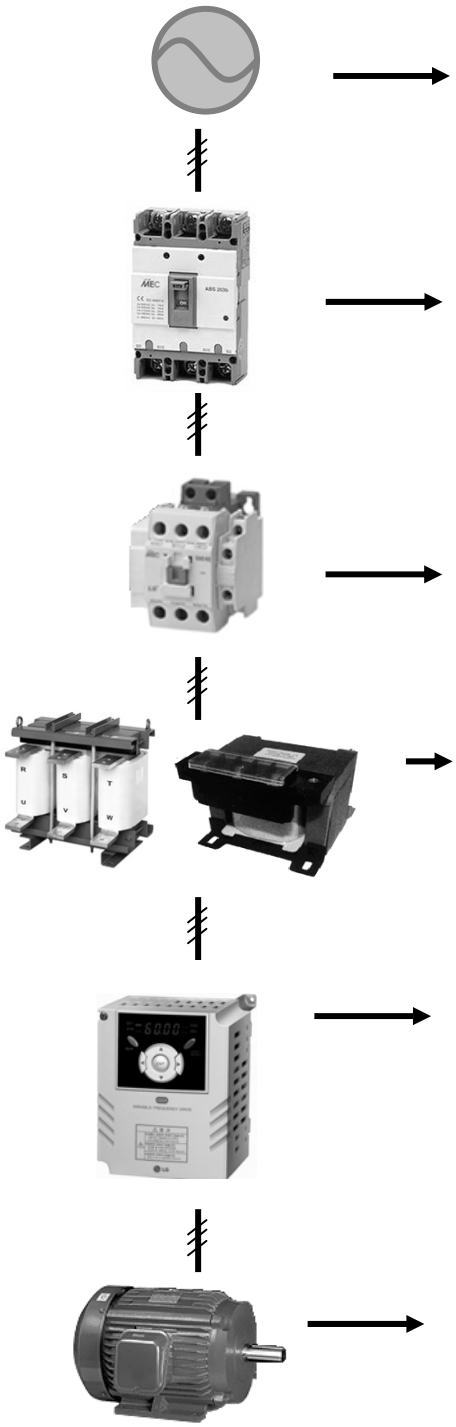

| | |
|---|---|
| AC Source Supply | Use the power supply within the permissible range of inverter input power rating (Refer to Page 13-1). |
| MCCB or Earth leakage circuit breaker (ELB) | Select circuit breakers with care. A large inrush current may flow in the inverter at power on. |
| Magnetic Contactor | Install it if necessary. When installed, do not use it for the purpose of starting or stopping. Otherwise, it could lead to reduction in product life. |
| AC and DC Reactors notice1 | The AC reactors must be used when the power factor is to be improved or the inverter is installed near a large power supply system (more than 10 times of inverter capacity and wiring distance within 10m). |
| Installation and wiring | To operate the inverter with high performance for a long time, install the inverter in a proper place in the correct direction and with proper clearances. Incorrect terminal wiring could result in the equipment damage. |
| To motor | Do not connect a power factor capacitor, surge suppressor or radio noise filter to the output side of the inverter. |

Notice1) Terminal block for DC reactor is composed in the more than 11kw capacity

## 3.2 Recommended MCCB

| Inverter Capacity | MCCB LS | MC |
|---|---|---|
| 004iG5A-1 | ABS33b,EBs33 | GMC-12 |
| 008iG5A-1 | ABS33b,EBs33 | GMC-12 |
| 015iG5A-1 | ABS33b,EBs33 | GMC-12 |
| 004iG5A-2 | ABS33b,EBs33 | GMC-12 |
| 008iG5A-2 | ABS33b,EBs33 | GMC-12 |
| 015iG5A-2 | ABS33b,EBs33 | GMC-12 |
| 022iG5A-2 | ABS33b,EBs33 | GMC-18 |
| 037iG5A-2 | ABS33b,EBs33 | GMC-22 |
| 040iG5A-2 | ABS33b,EBs33 | GMC-22 |
| 055iG5A-2 | ABS53b,EBs53 | GMC-22 |
| 075iG5A-2 | ABS103b,EBs53 | GMC-32 |
| 110IG5A-2 | ABS103b,EBs53 | GMC-50 |
| 150IG5A-2 | ABS203b,EBs53 | GMC-65 |
| 185IG5A-2 | ABS203b,EBs53 | GMC-85 |
| 220IG5A-2 | ABS203b,EBs53 | GMC-100 |

| Inverter Capacity | MCCB LS | MC |
|---|---|---|
| 004iG5A-4 | ABS33b,EBs33 | GMC-12 |
| 008iG5A-4 | ABS33b,EBs33 | GMC-12 |
| 015iG5A-4 | ABS33b,EBs33 | GMC-12 |
| 022iG5A-4 | ABS33b,EBs33 | GMC-22 |
| 037iG5A-4 | ABS33b,EBs33 | GMC-22 |
| 040iG5A-4 | ABS33b,EBs33 | GMC-22 |
| 055iG5A-4 | ABS33b,EBs33 | GMC-22 |
| 075iG5A-4 | ABS33b,EBs33 | GMC-22 |
| 110IG5A-4 | ABS53b,EBs53 | GMC-22 |
| 150IG5A-4 | ABS103b,EBs53 | GMC-25 |
| 185IG5A-4 | ABS103b,EBs53 | GMC-40 |
| 220IG5A-4 | ABS103b,EBs53 | GMC-50 |

## 3.3 Recommendable Fuse, Reactors

| Inverter Capacity | AC Input fuse [External Fuse] | | AC Reactor | DC Reactor |
|---|---|---|---|---|
| | Current | Voltage | | |
| 004iG5A-1 | 10 A | 500 V | 4.20 mH, 3.5A | - |
| 008iG5A-1 | 10 A | 500 V | 2.13 mH, 5.7A | - |
| 015iG5A-1 | 15 A | 500 V | 1.20 mH, 10A | |
| 004iG5A-2 | 10 A | 500 V | 4.20 mH, 3.5A | |
| 008iG5A-2 | 10 A | 500 V | 2.13 mH, 5.7A | |
| 015iG5A-2 | 15 A | 500 V | 1.20 mH, 10A | - |
| 022iG5A-2 | 25 A | 500 V | 0.88 mH, 14A | - |
| 037iG5A-2 | 30 A | 500 V | 0.56 mH, 20A | - |
| 040iG5A-2 | 30 A | 500 V | 0.56 mH, 20A | - |
| 055iG5A-2 | 30 A | 500 V | 0.39 mH, 30A | - |
| 075iG5A-2 | 50 A | 500 V | 0.28 mH, 40A | - |
| 110IG5A-2 | 70 A | 500 V | 0.20 mH, 59 A | 0.74 mH, 56 A |
| 150IG5A-2 | 100 A | 500 V | 0.15 mH, 75 A | 0.57 mH, 71 A |
| 185IG5A-2 | 100 A | 500 V | 0.12 mH, 96 A | 0.49 mH, 91 A |
| 220IG5A-2 | 125 A | 500 V | 0.10 mH, 112 A | 0.42mH, 107 A |
| 004iG5A-4 | 5 A | 500 V | 18.0 mH, 1.3A | - |
| 008iG5A-4 | 10 A | 500 V | 8.63 mH, 2.8A | - |
| 015iG5A-4 | 10 A | 500 V | 4.81 mH, 4.8A | - |
| 022iG5A-4 | 10 A | 500 V | 3.23 mH, 7.5A | - |
| 037iG5A-4 | 20 A | 500 V | 2.34 mH, 10A | - |
| 040iG5A-4 | 20 A | 500 V | 2.34 mH, 10A | - |
| 055iG5A-4 | 20 A | 500 V | 1.22 mH, 15A | - |
| 075iG5A-4 | 30 A | 500 V | 1.14 mH, 20A | - |
| 110IG5A-4 | 35 A | 500 V | 0.81 mH, 30 A | 2.76 mH, 29 A |
| 150IG5A-4 | 45 A | 500 V | 0.61 mH, 38 A | 2.18 mH, 36 A |
| 185IG5A-4 | 60 A | 500 V | 0.45 mH, 50 A | 1.79 mH, 48 A |
| 220IG5A-4 | 70 A | 500 V | 0.39 mH, 58 A | 1.54 mH, 55 A |

- **Short Circuit Rating**
  "Suitable For Use ON A Circuit Capable Of Delivering Not More Then 65KA Symmetrical Amperes. 240V drives or 480V drives Volts Maximum,"
- **Short Circuit FUSE/BREAKER Marking**
  Use Class H or K5 UL Listed Input Fuse and UL Listed Breaker Only. See the table above For the Voltage and Current rating of the fuse and the breaker

# CHAPTER 4 - PROGRAMMING KEYPAD & BASIC OPERATION

## 4.1 Keypad features

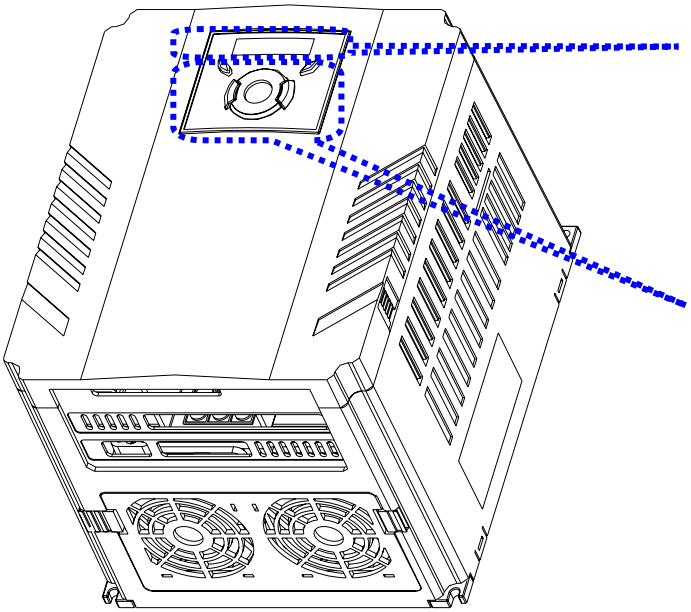

**Display**

- SET/RUN LED
- FWD/REV LED
- 7 Segment LED

**Key**

- RUN
- STOP/RESET
- Up/Down
- Left/Right
- Enter [ENT]

| Display | | |
|---|---|---|
| FWD | Lit during forward run | Blinks when a fault occurs |
| REV | Lit during reverse run | |
| RUN | Lit during Operation | |
| SET | Lit during parameter setting | |
| 7 segment | Displays operation status and parameter information | |

| Keys | | |
|---|---|---|
| RUN | | Run command |
| STOP/RESET | | STOP: Stop command during operation,<br>RESET: Reset command when fault occurs. |
| ▲ | UP | Used to scroll through codes or increase parameter value |
| ▼ | Down | Used to scroll through codes or decrease parameter value |
| ◀ | Left | Used to jump to other parameter groups or move a cursor to the left to change the parameter value |
| ▶ | Right | Used to jump to other parameter groups or move cursor to the right to change the parameter value |
| ● | ENT | Used to set the parameter value or save the changed parameter value |

## 4.2 Alpha-numeric view on the LED keypad

| | | | | | | | |
|---|---|---|---|---|---|---|---|
| 0 | 0 | A | A | K | K | U | U |
| 1 | 1 | b | B | L | L | v | V |
| 2 | 2 | C | C | M | M | W | W |
| 3 | 3 | d | D | n | N | X | X |
| 4 | 4 | E | E | O | O | Y | Y |
| 5 | 5 | F | F | P | P | Z | Z |
| 6 | 6 | G | G | q | Q | | |
| 7 | 7 | H | H | r | R | | |
| 8 | 8 | i | I | S | S | | |
| 9 | 9 | J | J | t | T | | |

## 4.3 Moving to other groups

- There are 4 different parameter groups in SV- iG5A series as shown below.

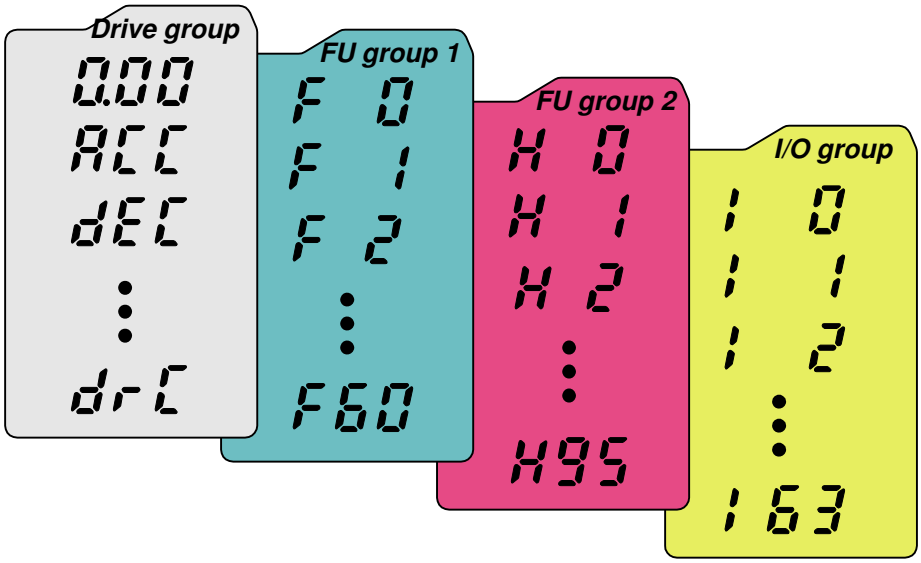


| | |
|---|---|
| Drive group | Basic parameters necessary for the inverter to run. Parameters such as Target frequency, Accel/Decel time settable. |
| Function group 1 | Basic function parameters to adjust output frequency and voltage. |
| Function group 2 | Advanced function parameters to set parameters for such as PID Operation and second motor operation. |
| I/O (Input/Output) group | Parameters necessary to make up a sequence using Multi-function input/output terminal. |

- **<u>Moving to other parameter groups</u>** is only available in the first code of each group as the figure shown below.

| Moving to other groups using the Right (▶) key | Moving to other groups using the Left (◀) key |
|---|---|
| 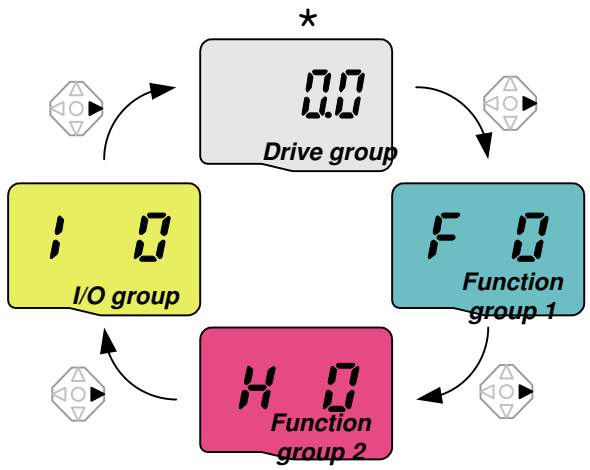 | 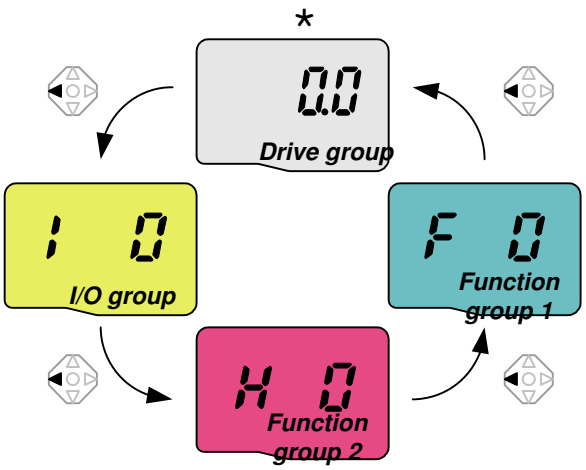 |



* Target frequency can be set at **0.0** (the 1st code of drive group). Even though the preset value is 0.0, it is user-settable. The changed frequency will be displayed after it is changed.

- How to move to other groups at the 1st code of each group

| | | |
|---|---|---|
| 1 | 0.00 | -. **<u>The 1st code in Drive group "0.00"</u>** will be displayed when AC input power is applied.<br>-. Press the right arrow (▶) key once to go to Function group 1. |
| 2 | F 0 | -. **<u>The 1st code in Function group 1 "F 0"</u>** will be displayed.<br>-. Press the right arrow (▶) key once to go to Function group 2. |
| 3 | H 0 | -. **<u>The 1st code in Function group 2 "H 0"</u>** will be displayed.<br>-. Press the right arrow (▶) key once to go to I/O group. |
| 4 | I 0 | **<u>-. The 1st code in I/O group "I 0" will be displayed.</u>**<br>-. Press the right arrow (▶) key once again to return to Drive group. |
| 5 | 0.00 | -. Return to **<u>the 1st code in Drive group "0.00"</u>**. |

♣ If the left arrow key (◀) is used, the above will be executed in the reverse order.

- How to move to other groups from any codes other than the 1st code

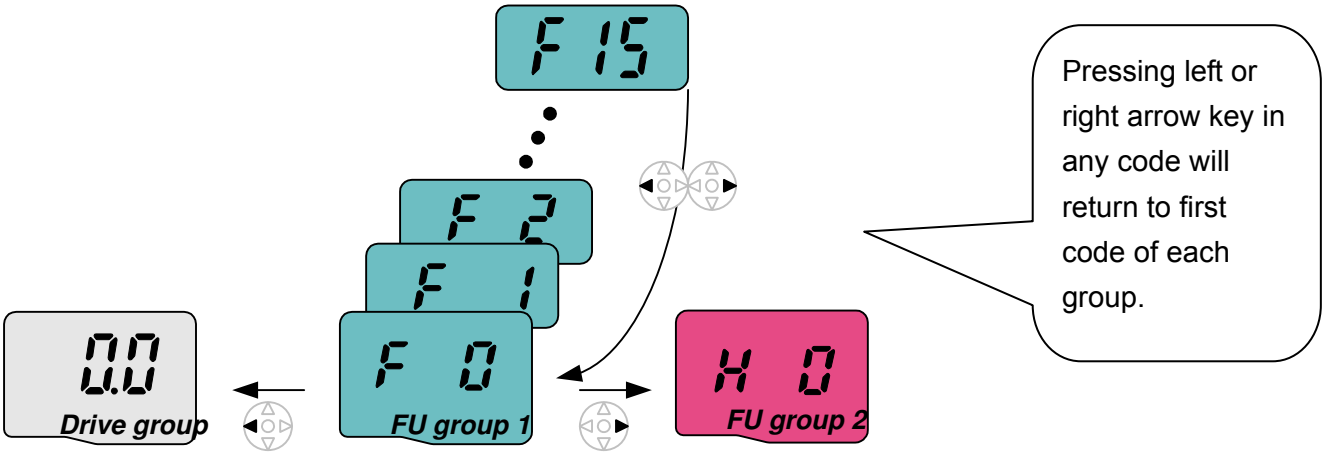


To move from the F 15 to function group 2

| | | |
|---|---|---|
| 1 | F 15 | -. In F 15, press the Left (◀) or Right arrow (▶) key. Pressing the key goes to the first code of the group. |
| 2 | F 0 | -. The 1st code in function group 1 "F 0" is displayed.<br>-. Press the right arrow (▶) key. |
| 3 | H 0 | -. The 1st code in function group 2 "H 0" will be displayed. |

## 4.4 How to change the codes in a group

- Code change in Drive group

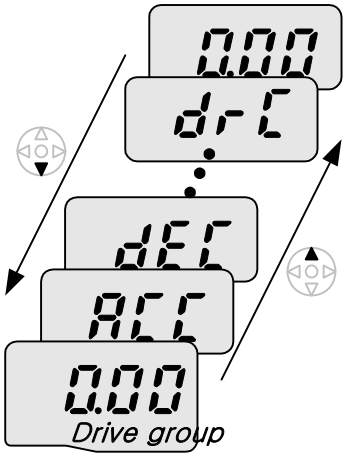


| | | |
|---|---|---|
| 1 | 0.00 | -. In the 1st code in Drive group “0.00”, press the Up (▲) key once. |
| 2 | ACC | -. The 2nd code in Drive group “ACC” is displayed.<br>-. Press the Up (▲) key once. |
| 3 | dEC | -. The 3rd code “dEC” in Drive group is displayed.<br>-. Keep pressing the Up (▲) key until the last code appears. |
| 4 | drC | -. The last code in Drive group “drC” is displayed.<br>-. Press the Up (▲) key again. |
| 5 | 0.00 | -. Return to the first code of Drive group. |
| ♣ Use Down (▼) key for the opposite order. | | |

- Code jump

When moving from the “F 0” to the “F 15” directly

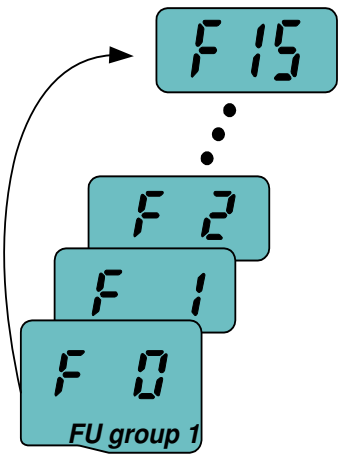


| | | |
|---|---|---|
| 1 | F 0 | -. Press the Ent (●) key in “F 0”. |
| 2 | 1 | -. 1 (the code number of F1) is displayed. Use the Up (▲) key to set to 5. |
| 3 | 05 | -. “**0**5” is displayed by pressing the Left (◀) key once to move the cursor to the left. The numeral having a cursor is displayed brighter. In this case, **0** is active.<br>-. Use the Up (▲) key to set to 1. |
| 4 | 15 | -. **1**5 is set.<br>-. Press the Ent (●) key once. |
| 5 | F 15 | -. Moving to F 15 has been complete. |

♣ Function group 2 and I/O group are settable with the same setting.

- Navigating codes in a group

When moving from F 1 to F 15 in Function group 1

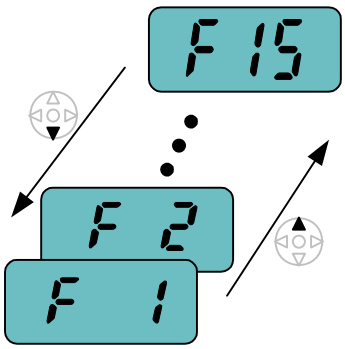


| | | |
|---|---|---|
| 1 | F 1 | -. In F 1, continue pressing the Up (▲) key until F15 is displayed. |
| 2 | F 15 | -. Moving to F15 has been complete. |
| ♣ The same applies to Function group 2 and I/O group. | | |

♣Note: Some codes will be skipped in the middle of increment (▲)/decrement (▼) for code change. That is because it is programmed that some codes are intentionally left blank for future use or the codes user does not use are invisible.
Refer to the Ch.5 for more specific contents

For example, when F24 [High/low frequency limit select] is set to “O (No) ”, F25 [High frequency limit] and F26 [Low frequency limit] are not displayed during code change. But When F24 is set to “1(Yes)”, F25 and F26 will appear on the display.

## 4.5 Parameter setting

- Changing parameter values in Drive Group

When changing ACC time from 5.0 sec to 16.0 sec

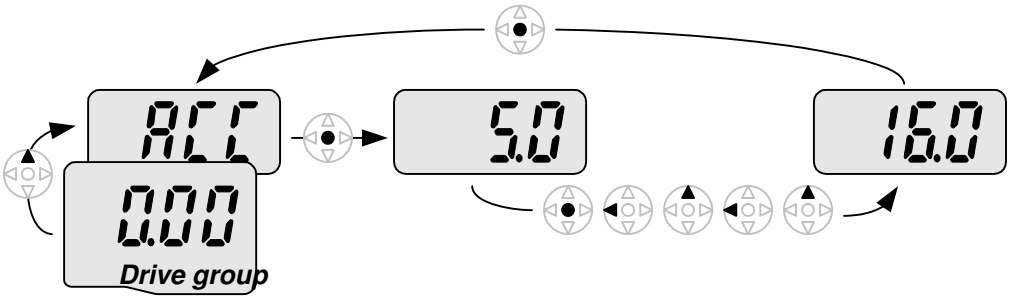


| | | |
|---|---|---|
| 1 | 0.00 | -. In the first code “0.00”, press the Up (▲) key once to go to the second code. |
| 2 | ACC | -. ACC [Accel time] is displayed.<br>-. Press the Ent key (●) once. |
| 3 | 5.0 | -. Preset value is 5.**0**, and the cursor is in the digit **0**.<br>-. Press the Left (◀) key once to move the cursor to the left. |
| 4 | 5.0 | -. The digit **5** in **5**.0 is active. Then press the Up (▲) key once. |
| 5 | 6.0 | -. The value is increased to **6**.0<br>-. Press the Left (◀) key to move the cursor to the left. |
| 6 | 0.60 | -. **0**.60 is displayed. The first **0** in **0**.60 is active.<br>-. Press the Up (▲) key once. |
| 7 | 16.0 | -. **1**6.0 is set.<br>-. Press the Ent (●) key once.<br>-. **1**6.0 is blinking.<br>-. Press the Ent (●) key once again to return to the parameter name. |
| 8 | ACC | -. **ACC** is displayed. **Accel time** is changed from 5.0 to 16.0 sec. |

♣ In step 7, pressing the Left (◀) or Right (▶) key while 16.0 is blinking will disable the setting.

Note 1) Pressing the Left (◀)/ Right (▶) /Up (▲) /Down (▼) key while cursor is blinking will cancel the parameter value change. Pressing the Enter key (●) in this status will enter the value into memory.

- Frequency setting

When changing run frequency to 30.05 Hz in Drive group

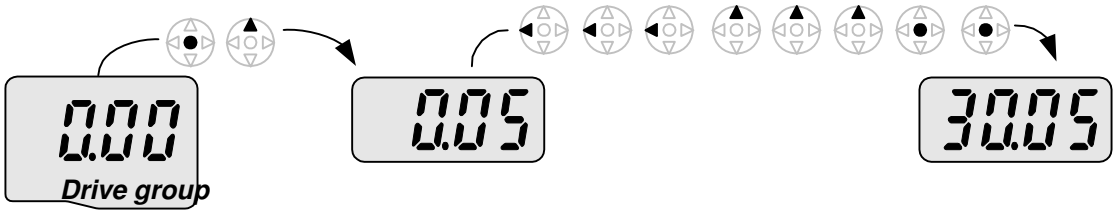


| | | |
|---|---|---|
| 1 | 0.00 | -. In “0.00”, press the Ent (●) key once. |
| 2 | 0.00 | -. The second decimal **0** becomes active.<br>-. Press the UP (▲) key until 5 is displayed. |
| 3 | 0.05 | -. Press the Left (◀) key once. |
| 4 | 0.05 | -. The first decimal **0** becomes active.<br>-. Press the Left (◀) key once. |
| 5 | 0.05 | -. Press the Left (◀) key once. |
| 6 | 0.05 | -. Set 3 using UP (▲) key. |
| 7 | 30.05 | -. Press the Ent (●) key.<br>-. 30.05 is blinking.<br>-. Press the Ent (●) key. |
| 8 | 30.05 | -. 30.05 is entered into memory. |

♣ SV-iG5A display can be extended to 5 digits using left (◀)/right (▶) keys.

♣ Parameter setting is disabled when pressing other than Enter Key in step 7.

- Changing parameter value in Input/Output group

When changing the parameter value of F28 from 2 to 5

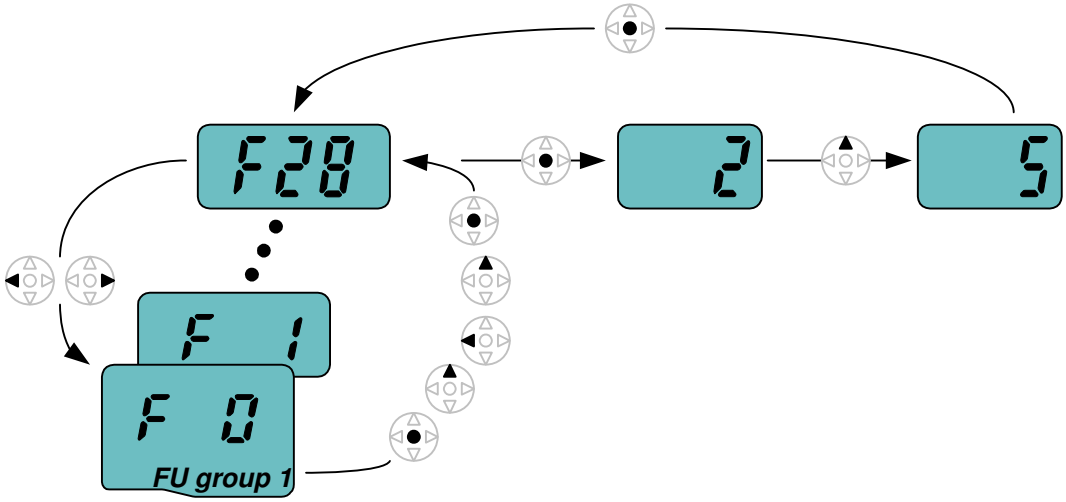


| | | |
|---|---|---|
| 1 | F 0 | -. In F0, press the Ent (●) key once. |
| 2 | 1 | -. Check the present code number.<br>-. Increase the value to 8 by pressing the Up (▲) key. |
| 3 | 8 | -. When 8 is set, press the Left (◀) key once. |
| 4 | 08 | -. **0** in **0**8 is active.<br>-. Increase the value to 2 by pressing the Up (▲) key. |
| 5 | 28 | -. **2**8 is displayed<br>-. Press the Ent (●) key once. |
| 6 | F 28 | -. The parameter number F28 is displayed.<br>-. Press the Ent (●) key once to check the set value. |
| 7 | 2 | -. The preset value 2 is displayed.<br>-. Increase the value to 5 using UP key (▲). |
| 8 | 5 | -. Press the Ent (●) key. |
| 9 | F 28 | -. Code number will appear after 5 is blinking. Parameter change is complete.<br>-. Press either Left (◀) or Right (▶) keys. |
| 10 | F 0 | -. Moving to first code of Function group 1 is complete. |

♣ The above setting is also applied to change parameter values in function group 2 and I/O group.

## 4.6 Monitoring of operation status

- Output current display

Monitoring output current in Drive group

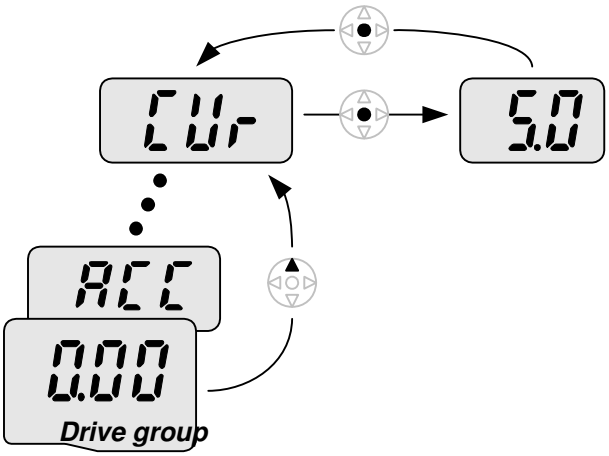


| | | |
|---|---|---|
| 1 | 0.00 | -. In [0.0], continue pressing the Up (▲) or Down (▼) key until [CUr] is displayed. |
| 2 | CUr | -. Monitoring output current is provided in this parameter.<br>-. Press the Enter (●) key once to check the current. |
| 3 | 5.00 | -. Present output current is 5 A.<br>-. Press the Enter (●) key once to return to the parameter name. |
| 4 | CUr | -. Return to the output current monitoring code. |

♣ Other parameters in Drive group such as dCL (Inverter DC link voltage) or vOL (Inverter output voltage) can be monitored via the same method.

- Fault display

How to monitor fault condition in Drive group

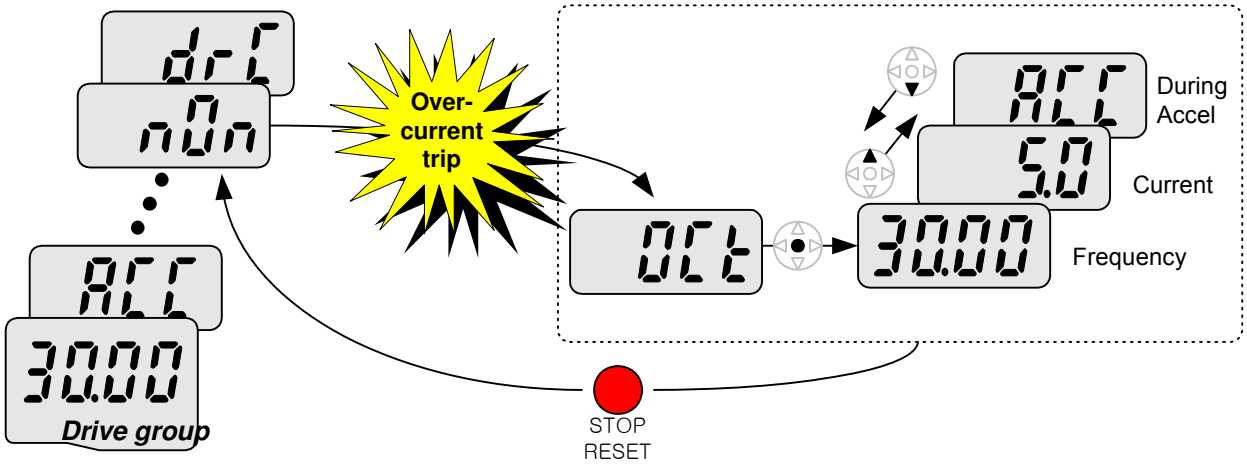


| | | |
|---|---|---|
| 1 | OCt | -. This message appears when an Overcurrent fault occurs.<br>-. Press the Enter (●) key or UP/Down key once. |
| 2 | 30.00 | -. The **run frequency** at the time of fault (30.0) is displayed.<br>-. Press the Up (▲) key once. |
| 3 | 5.0 | -. The **output current** at the time of fault is displayed.<br>-. Press the Up (▲) key once. |
| 4 | ACC | -. Operating status is displayed. A fault occurred during acceleration.<br>-. Press the STOP/RST key once. |
| 5 | nOn | -. A fault condition is cleared and “nOn” is displayed. |

When more than one fault occurs at the same time

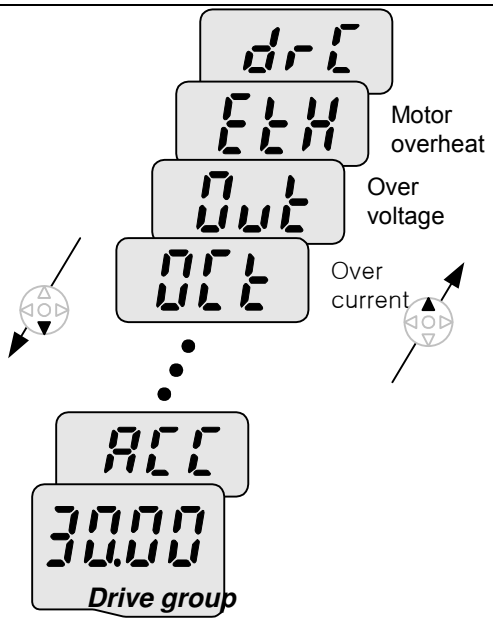


-. Maximum three faults information is displayed as shown left.

- Parameter initialize

How to initialize parameters of all four groups in H93

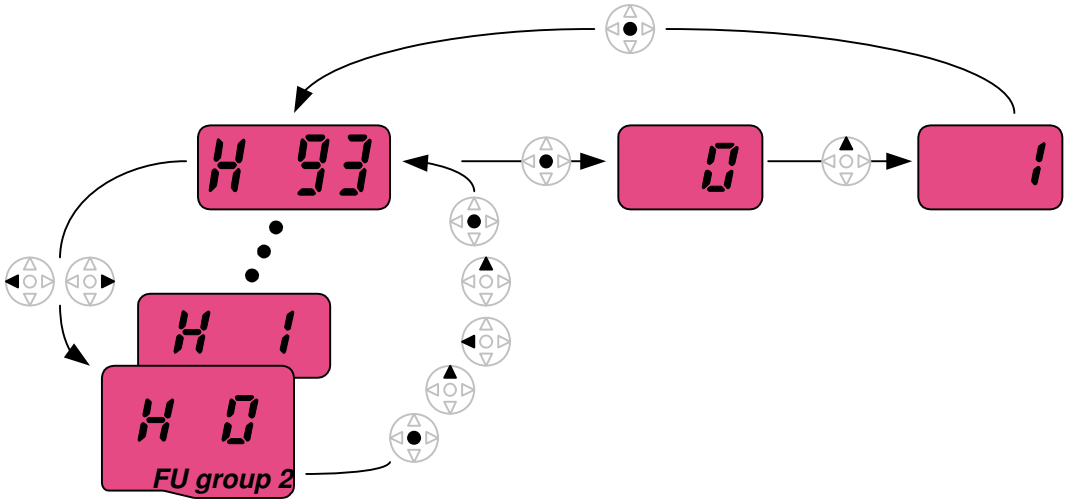


| | | |
|---|---|---|
| 1 | H 0 | -. In H0, press the Enter (●) key once. |
| 2 | 1 | -. Code number of H0 is displayed.<br>-. Increase the value to 3 by pressing the Up (▲) key. |
| 3 | 3 | -. In **3**, press the Left (◀) key once to move the cursor to the left. |
| 4 | 03 | -. **0**3 is displayed. **0** in **0**3 is active.<br>-. Increase the value to 9 by pressing the Up (▲) key. |
| 5 | 93 | -. **9**3 is set.<br>-. Press the Enter (●) key once. |
| 6 | H 93 | -. The parameter number is displayed.<br>-. Press the Enter (●) key once. |
| 7 | 0 | -. Present setting is 0.<br>-. Press the Up (▲) key once to set to 1 to activate parameter initialize. |
| 8 | 1 | -. Press the Enter (●) key once. |
| 9 | H 93 | -. Return to the parameter number after blinking. Parameter initialize has been complete.<br>-. Press the either Left (◀) or Right (▶) key. |
| 10 | H 0 | -. Return to H0. |

## 4.7 Frequency Setting and Basic Operation

☞ **Caution :** The following instructions are given based on the fact that all parameters are set to factory defaults. Results could be different if parameter values are changed. In this case, initialize parameter values (see page 10-21) back to factory defaults and follow the instructions below.

● Frequency Setting via keypad & operating via terminals

| | | |
|---|---|---|
| 1 | | -. Apply AC input power to the inverter. |
| 2 | 0.00 | -. When 0.00 appears, press the Ent (●) key once. |
| 3 | 0.00 | -. The second digit in 0.0**0** is lit as shown right.<br>-. Press the Left (◀) key three times. |
| 4 | 00.00 | -. **0**0.00 is displayed and the first **0** is lit.<br>-. Press the Up (▲) key. |
| 5 | 10.00 | -. **1**0.00 is set. Press the Ent (●) key once.<br>-. 10.00 is blinking. Press the Ent (●) key once. |
| 6 | 10.00 | -. Run frequency is set to **10.00** Hz when the blinking stops.<br>-. Turn on the switch between P1 (FX) and CM terminals. |
| 7 | 10.00 | -. RUN lamp begins to blink with FWD (Forward Run) lit and accelerating frequency is displayed on the LED.<br>-. When target run frequency 10Hz is reached, **10.00** is displayed.<br>-. Turn off the switch between P1 (FX) and CM terminals. |
| 8 | 10.00 | -. RUN lamp begins to blink and decelerating frequency is displayed on the LED.<br>-. When run frequency is reached to 0Hz, Run and FWD lamp turn off and **10.00** is displayed. |

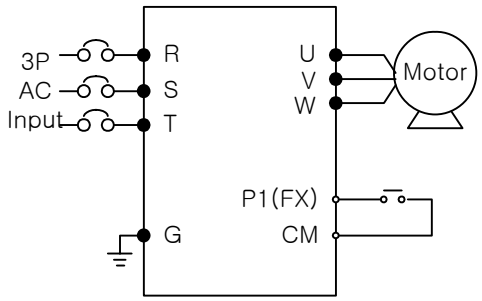


Wiring

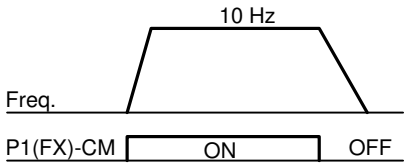


Operating pattern

● Frequency Setting via potentiometer & operating via terminals

| | | |
|---|---|---|
| 1 | | -. Apply AC input power to the inverter. |
| 2 | 0.00 | -. When 0.00 appears Press the Up (▲) key four times. |
| 3 | Frq | -. Frq is displayed. Frequency setting mode is selectable.<br>-. Press the Ent (●) key once. |
| 4 | 0 | -. Present setting method is set to 0 (frequency setting via keypad).<br>-. Press the Up (▲) key three times. |
| 5 | 3 | -. After 3 (Frequency setting via potentiometer) is set, press the Ent (●) key once. |
| 6 | Frq | -. Frq is redisplayed after 3 stops blinking.<br>-. Turn the potentiometer to set to 10.00 Hz in either Max or Min direction. |
| 7 | 10.00 | -. Turn on the switch between P1 (FX) and CM (See Wiring below).<br>-. RUN lamp begins to blink with FWD lamp lit and the accelerating frequency is displayed on the LED.<br>-. When run frequency 10Hz is reached, the value is displayed as shown left.<br>-. Turn off the switch between P1 (FX) and CM terminals. |
| 8 | 10.00 | -. RUN lamp begins to blink and decelerating frequency is displayed on the LED.<br>-. When run frequency is reached to 0Hz, Run and FWD lamp turn off and **10.00** is displayed. |

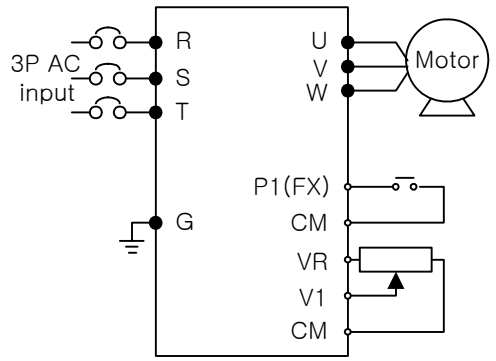


Wiring

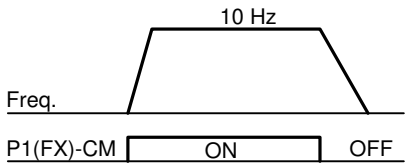


Operating pattern

- Frequency setting via potentiometer & operating via the Run key

| | | |
|---|---|---|
| 1 | | -. Apply AC input power to the inverter. |
| 2 | 0.00 | -. When 0.00 is displayed, press the Up (▲) key three times. |
| 3 | drv | -. “drv” is displayed. Operating method is selectable.<br>-. Press the Ent (●) key. |
| 4 | 1 | -. Check the present operating method (“1”: Run via control terminal).<br>-. Down (▼) key once. |
| 5 | 0 | -. After setting “0”, press the Ent (●) key. When 0 is blinking, press the Ent again. |
| 6 | drv | -. “drv” is displayed after “0” is blinking. Operation method is set via the Run key on the keypad. -. Press the Up (▲) key once. |
| 7 | Frq | -. Different frequency setting method is selectable.<br>-. Press the Ent (●) key. |
| 8 | 0 | -. Check the present frequency setting method (“**0**” is run via keypad).<br>-. Press the Up (▲) key three times. |
| 9 | 3 | -. After checking “**3**” (frequency setting via potentiometer), press the Ent (●) key. |
| 10 | Frq | -. “**Frq**” is displayed after “3” is blinking. Frequency setting is set via the potentiometer on the keypad.<br>-. Turn the potentiometer to set to 10.0 Hz in either Max or Min direction. |
| 11 | 10.00 | -. Press the Run key on the keypad.<br>-. RUN lamp begins to blink with FWD lamp lit and accelerating frequency is displayed on the LED.<br>-. When run frequency 10Hz is reached, **10.00** is displayed as shown left.<br>-. Press the STOP/RST key. |
| 12 | 10.00 | -. RUN lamp begins to blink and decelerating frequency is displayed on the LED.<br>-. When run frequency is reached to 0Hz, Run and FWD lamp turn off and **10.00** is displayed. |

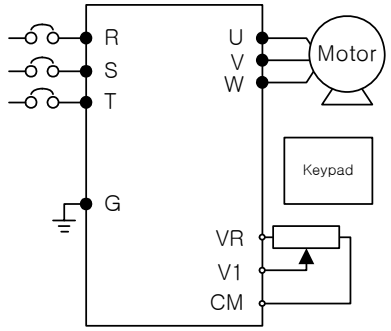


Wiring

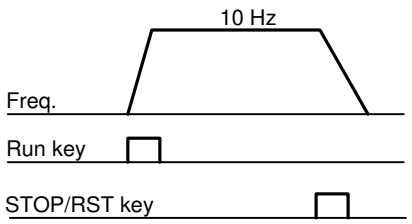


Operating pattern

# CHAPTER 5 - FUNCTION LIST

- Drive Group

| LED display | Address for communication | Parameter name | Min/Max range | Description | Factory defaults | Adj. during run | Page |
|---|---|---|---|---|---|---|---|
| 0.00 | A100 | [Frequency command] | 0 ~ 400 [Hz] | This parameter sets the frequency that the inverter is commanded to output.<br>During Stop: Frequency Command<br>During Run: Output Frequency<br>During Multi-step operation:<br>Multi-step frequency 0.<br>It cannot be set greater than F21- [Max frequency]. | 0.00 | O | 7-1 |
| ACC | A101 | [Accel time] | 0 ~ 6000 [Sec] | During Multi-Accel/Decel operation, this parameter serves as Accel/Decel time 0. | 5.0 | O | 7-12 |
| dEC | A102 | [Decel time] | | | 10.0 | O | 7-12 |
| drv | A103 | [Drive mode] | 0 ~ 3 | 0 Run/Stop via Run/Stop key on the keypad | 1 | X | 7-8 |
| | | | | 1 Terminal operation: FX: Motor forward run; RX: Motor reverse run | | | 7-8 |
| | | | | 2 Terminal operation: FX: Run/Stop enable; RX: Reverse rotation select | | | |
| | | | | 3 RS485 communication | | | 7-9 |
| Frq | A104 | [Frequency setting method] | 0 ~ 7 | 0 Digital: Keypad setting 1 | 0 | X | 7-1 |
| | | | | 1 Digital: Keypad setting 2 | | | 7-1 |
| | | | | 2 Analog: V1 1: -10 ~ +10 [V] | | | 7-2 |
| | | | | 3 Analog: V1 2: 0 ~ +10 [V] | | | 7-3 |
| | | | | 4 Analog: Terminal I: 0 ~ 20 [mA] | | | 7-4 |
| | | | | 5 Analog: Terminal V1 setting 1 + Terminal I | | | 7-5 |
| | | | | 6 Analog: Terminal V1 setting 2+ Terminal I | | | 7-6 |
| | | | | 7 RS485 communication | | | 7-5 |
| | | | | 8 Digital Volume | | | |
| St1 | A105 | [Multi-Step frequency 1] | 0 ~ 400 [Hz] | Sets Multi-Step frequency 1 during Multi-step operation. | 10.00 | O | 7-7 |
| St2 | A106 | [Multi-Step frequency 2] | | Sets Multi-Step frequency 2 during Multi-step operation. | 20.00 | O | 7-7 |
| St3 | A107 | [Multi-Step frequency 3] | | Sets Multi-Step frequency 3 during Multi-step operation. | 30.00 | O | 7-7 |
| CUr | A108 | [Output current] | | Displays the output current to the motor. | - | - | 9-1 |
| rPM | A109 | [Motor RPM] | | Displays the number of Motor RPM. | - | - | 9-1 |
| dCL | A10A | [Inverter DC link voltage] | | Displays DC link voltage inside the inverter. | - | - | 9-1 |
| vOL | A10B | [User display select] | | This parameter displays the item selected at H73- [Monitoring item select].<br>vOL: Output voltage | vOL | - | 9-2 |

- Drive Group

| LED display | Address for communication | Parameter name | Min/Max range | Description | Factory defaults | Adj. during run | Page |
|---|---|---|---|---|---|---|---|
| | | | | POr Output power<br>tOr Torque | | | |
| nOn | A10C | [Fault Display] | | Displays the types of faults, frequency and operating status at the time of the fault | - | - | 9-4 |
| drC | A10D | [Direction of motor rotation select] | F, r | Sets the direction of motor rotation when drv - [Drive mode] is set to either 0 or 1.<br>F Forward<br>r Reverse | F | O | 7-8 |
| **drv2** | A10E | [Drive mode 2] | 0 ~ 3 | 0 Run/Stop via Run/Stop key on the keypad<br>1 Terminal operation: FX: Motor forward run, RX: Motor reverse run<br>2 Terminal operation: FX: Run/Stop enable, RX: Reverse rotation select<br>3 RS-485 communication | 1 | X | 8-24 |
| **Frq2**[1] | A10F | [Frequency setting method 2] | 0 ~ 7 | 0 Digital: Keypad setting 1<br>1 Digital: Keypad setting 2<br>2 Analog: V1 1: -10 ~ +10 [V]<br>3 Analog: V1 2: 0 ~ +10 [V]<br>4 Analog: Terminal I: 0 ~ 20 [mA]<br>5 Analog: Terminal V1 setting 1 + Terminal I<br>6 Analog: Terminal V1 setting 2+ Terminal I<br>7 Analog: RS-485 communication | 0 | X | 8-24 |
| rEF[2] | A110 | PID control standard value setting | 0~400 [Hz] or 0~100 [%] | If H58 is 0, it is expressed as a [Hz] unit.<br>If H58 is 1, it is expressed as a [%] unit.<br>In [Hz] unit, you can't set Max. frequency more than (F21).<br>In [%] unit, 100% means Max. frequency. | 0.00 | 0 | 8-11 |
| Fbk[2] | A111 | PID control feedback amount | | It indicates a feedback amount in PID control.<br>If H58 is 0, it is expressed as a [Hz] unit.<br>If H58 is 1, it is expressed as a [%] unit. | - | - | 8-11 |

[1]: Only displayed when one of the Multi-function input terminals 1-8 [I17~I24] is set to "22".

[2]: It is indicated when H49(PID control selection) is 1.

- Function group 1

| LED display | Address for communication | Parameter name | Min/Max range | Description | | Factory defaults | Adj. during run | Page |
|---|---|---|---|---|---|---|---|---|
| F 0 | A200 | [Jump code] | 0 ~ 71 | Sets the parameter code number to jump. | | 1 | O | 4-5 |
| F 1 | A201 | [Forward/ Reverse run disable] | 0 ~ 2 | 0 | Fwd and rev run enable | 0 | X | 7-10 |
| | | | | 1 | Forward run disable | | | |
| | | | | 2 | Reverse run disable | | | |
| F 2 | A202 | [Accel pattern] | 0 ~ 1 | 0 | Linear | 0 | X | 7-15 |
| F 3 | A203 | [Decel pattern] | | 1 | S-curve | | | |
| F 4 | A204 | [Stop mode select] | 0 ~ 3 | 0 | Decelerate to stop | 0 | X | 7-20 |
| | | | | 1 | DC brake to stop | | | |
| | | | | 2 | Free run to stop | | | |
| | | | | 3 | Power Braking stop | | | 8-26 |
| **F 8**[1)] | A208 | [DC Brake start frequency] | 0.1 ~ 60 [Hz] | This parameter sets DC brake start frequency.<br>It cannot be set below F23 - [Start frequency]. | | 5.00 | X | 8-1 |
| **F 9** | A209 | [DC Brake wait time] | 0 ~ 60 [sec] | When DC brake frequency is reached, the inverter holds the output for the setting time before starting DC brake. | | 0.1 | X | |
| **F10** | A20A | [DC Brake voltage] | 0 ~ 200 [%] | This parameter sets the amount of DC voltage applied to a motor.<br>It is set in percent of H33 – [Motor rated current]. | | 50 | X | |
| **F11** | A20B | [DC Brake time] | 0 ~ 60 [sec] | This parameter sets the time taken to apply DC current to a motor while motor is at a stop. | | 1.0 | X | |
| F12 | A20C | [DC Brake start voltage] | 0 ~ 200 [%] | This parameter sets the amount of DC voltage before a motor starts to run.<br>It is set in percent of H33 – [Motor rated current]. | | 50 | X | 8-2 |
| F13 | A20D | [DC Brake start time] | 0 ~ 60 [sec] | DC voltage is applied to the motor for DC Brake start time before motor accelerates. | | 0 | X | |
| F14 | A20E | [Time for magnetizing a motor] | 0 ~ 60 [sec] | This parameter applies the current to a motor for the set time before motor accelerates during Sensorless vector control. | | 0.1 | X | 8-15 |
| F20 | A214 | [Jog frequency] | 0 ~ 400 [Hz] | This parameter sets the frequency for Jog operation.<br>It cannot be set above F21 – [Max frequency]. | | 10.00 | O | 8-3 |

[1)]: Only displayed when F 4 is set to 1 (DC brake to stop).

- Function group 1

| LED display | Address for communication | Parameter name | Min/Max range | Description | Factory defaults | Adj. during run | Page |
|---|---|---|---|---|---|---|---|
| F21[1)] | A215 | [Max frequency] | 40 ~ 400 [Hz] | This parameter sets the highest frequency the inverter can output.<br>It is frequency reference for Accel/Decel (See H70)<br>⚠Caution<br>Any frequency cannot be set above Max frequency except Base frequency | 60.00 | X | 7-21 |
| F22 | A216 | [Base frequency] | 30 ~ 400 [Hz] | The inverter outputs its rated voltage to the motor at this frequency (see motor nameplate). | 60.00 | X | 7-17 |
| F23 | A217 | [Start frequency] | 0.1 ~ 10 [Hz] | The inverter starts to output its voltage at this frequency.<br>It is the frequency low limit. | 0.50 | X | 7-21 |
| F24 | A218 | [Frequency high/low limit select] | 0 ~ 1 | This parameter sets high and low limit of run frequency. | 0 | X | 7-21 |
| **F25** [2)] | A219 | [Frequency high limit] | 0 ~ 400 [Hz] | This parameter sets high limit of the run frequency.<br>It cannot be set above F21 – [Max frequency]. | 60.00 | X | |
| **F26** | A21A | [Frequency low limit] | 0.1 ~ 400 [Hz] | This parameter sets low limit of the run frequency.<br>It cannot be set above F25 - [Frequency high limit] and below F23 – [Start frequency]. | 0.50 | X | |
| F27 | A21B | [Torque Boost select] | 0 ~ 1 | 0 Manual torque boost<br>1 Auto torque boost | 0 | X | 7-19 |
| F28 | A21C | [Torque boost in forward direction] | 0 ~ 15 [%] | This parameter sets the amount of torque boost applied to a motor during forward run.<br>It is set in percent of Max output voltage. | 2 | X | 7-19 |
| F29 | A21D | [Torque boost in reverse direction] | | This parameter sets the amount of torque boost applied to a motor during reverse run.<br>It is set as a percent of Max output voltage | 2 | X | 7-19 |

[1)]: If H40 is set to 3 (Sensorless vector), Max. frequency is settable up to 300Hz.

[2)]: Only displayed when F24 (Frequency high/low limit select) is set to 1.

- Function group 1

| LED display | Address for communication | Parameter name | Min/Max range | Description | | Factory defaults | Adj. during run | Page |
|---|---|---|---|---|---|---|---|---|
| F30 | A21E | [V/F pattern] | 0 ~ 2 | 0 | {Linear} | 0 | X | 7-17 |
| | | | | 1 | {Square} | | | 7-17 |
| | | | | 2 | {User V/F} | | | 7-18 |
| **F31**[1)] | A21F | [User V/F frequency 1] | 0 ~ 400 [Hz] | It is used only when V/F pattern is set to 2(User V/F)<br>It cannot be set above F21 – [Max frequency].<br>The value of voltage is set in percent of H70 – [Motor rated voltage].<br>The values of the lower-numbered parameters cannot be set above those of higher-numbered. | | 15.00 | X | 7-18 |
| **F32** | A220 | [User V/F voltage 1] | 0 ~ 100 [%] | | | 25 | X | |
| **F33** | A221 | [User V/F frequency 2] | 0 ~ 400 [Hz] | | | 30.00 | X | |
| **F34** | A222 | [User V/F voltage 2] | 0 ~ 100 [%] | | | 50 | X | |
| **F35** | A223 | [User V/F frequency 3] | 0 ~ 400 [Hz] | | | 45.00 | X | |
| **F36** | A224 | [User V/F voltage 3] | 0 ~ 100 [%] | | | 75 | X | |
| **F37** | A225 | [User V/F frequency 4] | 0 ~ 400 [Hz] | | | 60.00 | X | |
| **F38** | A226 | [User V/F voltage 4] | 0 ~ 100 [%] | | | 100 | X | |
| F39 | A227 | [Output voltage adjustment] | 40 ~ 110 [%] | This parameter adjusts the amount of output voltage.<br>The set value is the percentage of input voltage. | | 100 | X | 7-18 |
| F40 | A228 | [Energy-saving level] | 0 ~ 30 [%] | This parameter decreases output voltage according to load status. | | 0 | 0 | 8-17 |
| F50 | A232 | [Electronic thermal select] | 0 ~ 1 | This parameter is activated when the motor is overheated (time-inverse). | | 0 | 0 | 10-1 |

[1)]: Set F30 to 2(User V/F) to display this parameter.

- Function group 1

| LED display | Address for communication | Parameter name | Min/Max range | Description | Factory defaults | Adj. during run | Page |
|---|---|---|---|---|---|---|---|
| **F51** [1)] | A233 | [Electronic thermal level for 1 minute] | 50 ~ 200 [%] | This parameter sets max current capable of flowing to the motor continuously for 1 minute. The set value is the percentage of H33 – [Motor rated current]. It cannot be set below F52 –[Electronic thermal level for continuous]. | 150 | 0 | 10-1 |
| **F52** | A234 | [Electronic thermal level for continuous] | 50 ~ 150 [%] | This parameter sets the amount of current to keep the motor running continuously. It cannot be set higher than F51 – [Electronic thermal level for 1 minute]. | 100 | 0 | |
| **F53** | A235 | [Motor cooling method] | 0 ~ 1 | 0: Standard motor having cooling fan directly connected to the shaft<br>1: A motor using a separate motor to power a cooling fan. | 0 | 0 | |
| F54 | A236 | [Overload warning level] | 30 ~ 150 [%] | This parameter sets the amount of current to issue an alarm signal at a relay or multi-function output terminal (see I54, I55). The set value is the percentage of H33- [Motor rated current]. | 150 | 0 | 10-2 |
| F55 | A237 | [Overload warning time] | 0 ~ 30 [Sec] | This parameter issues an alarm signal when the current greater than F54- [Overload warning level] flows to the motor for F55- [Overload warning time]. | 10 | 0 | |
| F56 | A238 | [Overload trip select] | 0 ~ 1 | This parameter turns off the inverter output when motor is overloaded. | 1 | 0 | 10-2 |
| F57 | A239 | [Overload trip level] | 30 ~ 200 [%] | This parameter sets the amount of overload current. The value is the percentage of H33- [Motor rated current]. | 180 | 0 | |
| F58 | A23A | [Overload trip time] | 0 ~ 60 [Sec] | This parameter turns off the inverter output when the F57- [Overload trip level] of current flows to the motor for F58- [Overload trip time]. | 60 | 0 | |

[1)]: Set F50 to 1 to display this parameter.

- Function group 1

| LED display | Address for communication | Parameter name | Min/Max range | Description | Factory defaults | Adj. during run | Page |
|---|---|---|---|---|---|---|---|
| F59 | A23B | [Stall prevention select] | 0 ~ 7 | This parameter stops accelerating during acceleration, decelerating during constant speed run and stops decelerating during deceleration.<br>During Decel / During constant run / During Accel<br>Bit 2 / Bit 1 / Bit 0<br>0: - / - / -<br>1: - / - / ✓<br>2: - / ✓ / -<br>3: - / ✓ / ✓<br>4: ✓ / - / -<br>5: ✓ / - / ✓<br>6: ✓ / ✓ / -<br>7: ✓ / ✓ / ✓ | 0 | X | 10-3 |
| F60 | A23C | [Stall prevention level] | 30 ~ 200 [%] | This parameter sets the amount of current to activate stall prevention function during Accel, Constant or Decel run.<br>The set value is the percentage of the H33-[Motor rated current]. | 150 | X | 10-3 |
| F61 1) | A23D | [When Stall prevention during deceleration, voltage limit select | 0~1 | In Stall prevention run during deceleration, if you want to limit output voltage, select 1 | | | 8-26 |
| F63 | A23F | [Save up/down frequency select] | 0 ~ 1 | This parameter decides whether to save the specified frequency during up/down operation.<br>When 1 is selected, the up/down frequency is saved in F64. | 0 | X | 8-4 |
| **F64** 2) | A240 | [Save up/down frequency] | | If 'Save up/down frequency' is selected at F63, this parameter saves the frequency before the inverter stops or decelerated. | 0.00 | X | 8-4 |
| **F65** | A241 | [Up-down mode select] | 0~2 | We can select up-down mode among three thing<br>0: Increases goal frequency as a standard of Max. frequency/Min. frequency<br>1: Increases as many as step frequency according to edge input<br>2: Available to combine 1 and 2 | 0 | X | 8-5 |

1): It is indicated when setting bit 2 of F59 as 1

2): Set F63 to 1 to display this parameter.

- Function group 1

| LED display | Address for communication | Parameter name | Min/Max range | Description | | Factory defaults | Adj. during run | Page |
|---|---|---|---|---|---|---|---|---|
| **F66** | A242 | [Up-down step frequency] | 0~400[Hz] | In case of choosing F65 as a 1 or 2, it means increase or decrease of frequency according to up-down input | | 0.00 | X | 8-5 |
| **F70** | A246 | [Draw run mode select] | 0~3 | 0 | Inverter doesn't run as a draw mode | 0 | X | 8-28 |
| | | | | 1 | V1(0~10V) input draw run | | | |
| | | | | 2 | I(0~20mA) input draw run | | | |
| | | | | 3 | V1(-10~10V) input draw run | | | |
| **F71** | A247 | [Draw rate] | 0~100[%] | Sets rate of draw | | 0.00 | 0 | 8-28 |

- Function group 2

| LED display | Address for communication | Parameter name | Min/Max range | Description | Factory defaults | Adj. during run | Page |
|---|---|---|---|---|---|---|---|
| H 0 | A300 | [Jump code] | 0~95 | Sets the code number to jump. | 1 | O | 4-5 |
| H 1 | A301 | [Fault history 1] | - | Stores information on the types of faults, the frequency, the current and the Accel/Decel condition at the time of fault. The latest fault is automatically stored in the H 1- [Fault history 1]. | nOn | - | 9-4 |
| H 2 | A302 | [Fault history 2] | - | | nOn | - | |
| H 3 | A303 | [Fault history 3] | - | | nOn | - | |
| H 4 | A304 | [Fault history 4] | - | | nOn | - | |
| H 5 | A305 | [Fault history 5] | - | | nOn | - | |
| H 6 | A306 | [Reset fault history] | 0~1 | Clears the fault history saved in H 1-5. | 0 | O | |
| H 7 | A307 | [Dwell frequency] | 0.1~400 [Hz] | When run frequency is issued, motor starts to accelerate after dwell frequency is applied to the motor during H8- [Dwell time].<br>[Dwell frequency] can be set within the range of F21- [Max frequency] and F23- [Start frequency]. | 5.00 | X | 8-7 |
| H 8 | A308 | [Dwell time] | 0~10 [sec] | Sets the time for dwell operation. | 0.0 | X | |
| H10 | A30A | [Skip frequency select] | 0 ~ 1 | Sets the frequency range to skip to prevent undesirable resonance and vibration on the structure of the machine. | 0 | X | 7-22 |
| **H11**[1)] | A30B | [Skip frequency low limit 1] | 0.1~400 [Hz] | Run frequency cannot be set within the range of H11 thru H16. The frequency values of the low numbered parameters cannot be set above those of the high numbered ones. Settable within the range of F21 and F23. | 10.00 | X | |
| **H12** | A30C | [Skip frequency high limit 1] | | | 15.00 | X | |
| **H13** | A30D | [Skip frequency low limit 2] | | | 20.00 | X | |
| **H14** | A30E | [Skip frequency high limit 2] | | | 25.00 | X | |
| **H15** | A30F | [Skip frequency low limit 3] | | | 30.00 | X | |
| **H16** | A310 | [Skip frequency high limit 3] | | | 35.00 | X | |

[1)]: only displayed when H10 is set to 1. # H17, H18 are used when F2, F3 are set to 1 (S-curve).

- Function group 2

| LED display | Address for communication | Parameter name | Min/Max range | Description | Factory defaults | Adj. during run | Page |
|---|---|---|---|---|---|---|---|
| H17 | A311 | [S-Curve accel/decel start side] | 1~100 [%] | Set the speed reference value to form a curve at the start during accel/decel. If it is set higher, linear zone gets smaller. | 40 | X | 7-15 |
| H18 | A312 | [S-Curve accel/decel end side] | 1~100 [%] | Set the speed reference value to form a curve at the end during accel/decel. If it is set higher, linear zone gets smaller. | 40 | X | |
| H19 | A313 | [Input/output phase loss protection select] | 0 ~ 3 | 0 Disabled<br>1 Output phase protection<br>2 Input phase protection<br>3 Input/output phase protection | 0 | O | 10-4 |
| H20 | A314 | [Power On Start select] | 0 ~ 1 | This parameter is activated when drv is set to 1 or 2 (Run/Stop via Control terminal). Motor starts acceleration after AC power is applied while FX or RX terminal is ON. | 0 | O | 7-11 |
| H21 | A315 | [Restart after fault reset selection] | 0 ~1 | This parameter is activated when drv is set to 1 or 2 (Run/Stop via Control terminal). Motor accelerates after the fault condition is reset while the FX or RX terminal is ON. | 0 | O | 7-11 |
| **H22** [1] | | [Speed Search Select] | 0 ~ 15 | This parameter is active to prevent any possible fault when the inverter outputs its voltage to the running motor. | 0 | O | 8-17 |

| | 1. H20-[Power On start] | 2. Restart after instant power failure | 3. Operation after fault | 4. Normal accel |
|---|---|---|---|---|
| | Bit 3 | Bit 2 | Bit 1 | Bit 0 |
| 0 | - | - | - | - |
| 1 | - | - | - | ✓ |
| 2 | - | - | ✓ | - |
| 3 | - | - | ✓ | ✓ |
| 4 | - | ✓ | - | - |

[1] Normal acceleration has first priority. Even though #4 is selected along with other bits, Inverter performs Speed search #4.

- Function group 2

| LED display | Address for communication | Parameter name | Min/Max range | Description | | | | | Factory defaults | Adj. during run | Page |
|---|---|---|---|---|---|---|---|---|---|---|---|
| **H22** 1) | A316 | | | | 1. H20-[Power On start] | 2. Restart after instant power failure | 3. Operation after fault | 4. Normal accel | | O | 8-17 |
| | | | | | Bit 3 | Bit 2 | Bit 1 | Bit 0 | | | |
| | | | | 5 | - | ✓ | - | ✓ | | | |
| | | | | 6 | - | ✓ | ✓ | - | | | |
| | | | | 7 | - | ✓ | ✓ | ✓ | | | |
| | | | | 8 | ✓ | - | - | - | | | |
| | | | | 9 | ✓ | - | - | ✓ | | | |
| | | | | 10 | ✓ | - | ✓ | - | | | |
| | | | | 11 | ✓ | - | ✓ | ✓ | | | |
| | | | | 12 | ✓ | ✓ | - | - | | | |
| | | | | 13 | ✓ | ✓ | - | ✓ | | | |
| | | | | 14 | ✓ | ✓ | ✓ | - | | | |
| | | | | 15 | ✓ | ✓ | ✓ | ✓ | | | |
| H23 | A317 | [Current level during Speed search] | 80~200 [%] | This parameter limits the amount of current during speed search.<br>The set value is the percentage of the H33-[Motor rated current]. | | | | | 100 | O | 8-17 |
| H24 | A318 | [P gain during Speed search] | 0~9999 | It is the Proportional gain used for Speed Search PI controller. | | | | | 100 | O | |
| H25 | A319 | [I gain during speed search] | 0~9999 | It is the Integral gain used for Speed search PI controller. | | | | | 200 | O | |
| H26 | A31A | [Number of Auto Restart try] | 0 ~10 | This parameter sets the number of restart tries after a fault occurs.<br>Auto Restart is deactivated if the fault outnumbers the restart tries.<br>This function is active when [drv] is set to 1 or 2 {Run/Stop via control terminal}.<br>Deactivated during active protection function (OHT, LVT, EXT, HWT etc.). | | | | | 0 | O | 8-20 |

- Function group 2

| LED display | Address for communication | Parameter name | Min/Max range | Description | Factory defaults | Adj. during run | Page |
|---|---|---|---|---|---|---|---|
| H27 | A31B | [Auto Restart time] | 0~60 [sec] | This parameter sets the time between restart tries. | 1.0 | O | 8-20 |
| H30 | A31E | [Motor type select] | 0.2~ 22.0 | 0.2 ~ 22.0 / 0.2kW ~ 22.0kW | **7.5**[1)] | X | 8-16 |
| H31 | A31F | [Number of motor poles] | 2 ~ 12 | This setting is displayed via rPM in drive group. | 4 | X | |
| H32 | A320 | [Rated slip frequency] | 0 ~ 10 [Hz] | $f_s = f_r - \left(\frac{rpm \times P}{120}\right)$ Where, $f_s$ = Rated slip frequency, $f_r$ = Rated frequency, $rpm$ = Motor nameplate RPM, $P$ = Number of Motor poles | **2.33** [2)] | X | |
| H33 | A321 | [Motor rated current] | 0.5~150 [A] | Enter motor rated current on the nameplate. | **26.3** | X | |
| H34 | A322 | [No Load Motor Current] | 0.1~ 50 [A] | Enter the current value detected when the motor is rotating in rated rpm after the load connected to the motor shaft is removed. Enter the 50% of the rated current value when it is difficult to measure H34 – [No Load Motor Current]. | **11** | X | |
| H36 | A324 | [Motor efficiency] | 50~100 [%] | Enter the motor efficiency (see motor nameplate). | **87** | X | |
| H37 | A325 | [Load inertia rate] | 0 ~ 2 | Select one of the following according to motor inertia.<br>0 Less than 10 times<br>1 About 10 times<br>2 More than 10 times | 0 | X | 8-1 |

[1)]: H30 is preset based on inverter rating.

[2)]: H32 ~ H36 factory default values are set based on OTIS-LG motor.

- Function group 2

| LED display | Address for communication | Parameter name | Min/Max range | Description | | Factory defaults | Adj. during run | Page |
|---|---|---|---|---|---|---|---|---|
| H39 | A327 | [Carrier frequency select] | 1 ~ 15 [kHz] | This parameter affects the audible sound of the motor, noise emission from the inverter, inverter temp, and leakage current. If the set value is higher, the inverter sound is quieter but the noise from the inverter and leakage current will become greater. | | 3 | O | 8-21 |
| H40 | A328 | [Control mode select] | 0 ~ 3 | 0 | {Volts/frequency Control} | 0 | X | 7-17 |
| | | | | 1 | {Slip compensation control} | | | 8-8 |
| | | | | 2 | - | | | |
| | | | | 3 | {Sensorless vector control} | | | 8-15 |
| H41 | A329 | [Auto tuning] | 0 ~ 1 | If this parameter is set to 1, it automatically measures parameters of the H42 and H44. | | 0 | X | 8-14 |
| H42 | A32A | [Stator resistance (Rs)] | 0 ~ 28 [Ω] | This is the value of the motor stator resistance. | | - | X | |
| H44 | A32C | [Leakage inductance (Lσ)] | 0~ 300.0 [mH] | This is leakage inductance of the stator and rotor of the motor. | | - | X | |
| **H45** 1) | A32D | [Sensorless P gain] | 0~ 32767 | P gain for Sensorless control | | 1000 | O | |
| **H46** | A32E | [Sensorless I gain] | | I gain for Sensorless control | | 100 | O | |
| **H47** | A32F | [Sensorless torque limit] | 100~220[%] | Limits output torque in sensorless mode,. | | 180.0 | X | |
| **H48** | A330 | PWM mode select | 0~1 | If you want to limit a inverter leakage current, select 2 phase PWM mode. It has more noise in comparison to Normal PWM mode. | | 0 | X | 8-30 |
| | | | | 0 | Normal PWM mode | | | |
| | | | | 1 | 2 phase PWM mode | | | |
| **H49** | A331 | PID control select | 0~1 | Selects whether using PID control or not | | 0 | X | 8-10 |
| **H50** 2) | A332 | [PID Feedback select] | 0 ~ 1 | 0 | Terminal I input (0 ~ 20 mA) | 0 | X | 8-10 |
| | | | | 1 | Terminal V1 input (0 ~ 10 V) | | | |
| **H51** | A333 | [P gain for PID controller] | 0~ 999.9 [%] | This parameter sets the gains for the PID controller. | | 300.0 | O | |
| **H52** | A334 | [Integral time for PID controller | 0.1~32.0 [sec] | | | 1.0 | O | |

| LED display | Address for communication | Parameter name | Min/Max range | Description | | Factory defaults | Adj. during run | Page |
|---|---|---|---|---|---|---|---|---|
| **H53** | A335 | [Differential time for PID controller (D gain)] | 0 ~ 30.0 [sec] | | | 0.0 | O | |
| **H54** | A336 | [PID control mode select] | 0~1 | Selects PID control mode | | 0 | X | 8-10 |
| | | | | 0 | Normal PID control | | | |
| | | | | 1 | Process PID control | | | |

[1)]: Set H40 to 3 (Sensorless vector control) to display this parameter.

[2)]: Set H49 to 1 (PID control) to display this parameter.

- Function group 2

| LED display | Address for communication | Parameter name | Min/Max range | Description | Factory defaults | Adj. during run | Page |
|---|---|---|---|---|---|---|---|
| **H55** | A337 | [PID output frequency high limit] | 0.1 ~ 400 [Hz] | This parameter limits the amount of the output frequency through the PID control. The value is settable within the range of F21 – [Max frequency] and F23 – [Start frequency]. | 60.00 | O | 8-10 |
| **H56** | A338 | [PID output frequency low limit] | 0.1 ~ 400 [Hz] | | 0.50 | O | |
| **H57** | A339 | [PID standard value select] | 0~4 | Selects PID standard value.<br>Standard value is indicated in "rEF" of Drive group.<br>0 Loader digital setting 1<br>1 Loader digital setting 2<br>2 V1 terminal setting 2: 0~10V<br>3 I terminal setting: 0~20mA<br>4 Setting as a RS-485 communication | 0 | X | 8-10 |
| **H58** | A33A | PID control unit select | 0~1 | Selects a unit of the standard value or feedback amount.<br>0 Frequency[Hz]<br>1 Percentage[%] | 0 | X | |
| H60 | A33C | [Self-diagnostic select] | 0 ~ 3 | 0 Self-diagnostic disabled<br>1 IGBT fault/Ground fault<br>2 Output phase short & open/ Ground fault<br>3 Ground fault (This setting is unable when more than 11kW) | 0 | X | 8-22 |
| H61[1)] | A33D | [Sleep delay time] | 0~2000[s] | Sets a sleep delay time in PID drive. | 60.0 | X | 8-13 |
| H62 | A33E | [Sleep frequency] | 0~400[Hz] | Sets a sleep frequency when executing a sleep function in PID control drive.<br>You can't set more than Max. frequency(F21) | 0.00 | O | |
| H63 | A33F | [Wake up level] | 0~100[%] | Sets a wake up level in PID control drive. | 35.0 | O | |
| H64 | A340 | [KEB drive select] | 0~1 | Sets KEB drive. | 0 | X | 8-28 |
| H65 | A341 | [KEB action start level] | 110~140 [%] | Sets KEB action start level according to level. | 125.0 | X | |
| H66 | A342 | [KEB action stop level] | 110~145 [%] | Sets KEB action stop level according to level. | 130.0 | X | |

1): **Set H49 as a 1**

2): **it is indicated when setting H64(KEB drive select) as a 1**

(KEB does not operate when cut power after loading ting input (about 10%).

| | | | | | | | |
|---|---|---|---|---|---|---|---|
| H67 | A343 | [KEB action gain] | 1~20000 | Sets KEB action gain. | 1000 | X | 8-28 |

| LED display | Address for communication | Parameter name | Min/Max range | Description | | Factory defaults | Adj. during run | Page |
|---|---|---|---|---|---|---|---|---|
| H70 | A346 | [Frequency Reference for Accel/Decel] | 0 ~ 1 | 0 | Based on Max freq (F21) | 0 | X | 7-12 |
| | | | | 1 | Based on Delta freq. | | | |
| H71 | A347 | [Accel/Decel time scale] | 0 ~ 2 | 0 | Settable unit: 0.01 second. | 1 | O | 7-13 |
| | | | | 1 | Settable unit: 0.1 second. | | | |
| | | | | 2 | Settable unit: 1 second. | | | |
| H72 | A348 | [Power on display] | 0 ~ 15 | This parameter selects the parameter to be displayed on the keypad when the input power is first applied. | | 0 | O | 9-2 |
| | | | | 0 | Frequency command | | | |
| | | | | 1 | Accel time | | | |
| | | | | 2 | Decel time | | | |
| | | | | 3 | Drive mode | | | |
| | | | | 4 | Frequency mode | | | |
| | | | | 5 | Multi-Step frequency 1 | | | |
| | | | | 6 | Multi-Step frequency 2 | | | |
| | | | | 7 | Multi-Step frequency 3 | | | |
| | | | | 8 | Output current | | | |
| | | | | 9 | Motor rpm | | | |
| | | | | 10 | Inverter DC link voltage | | | |
| | | | | 11 | User display select (H73) | | | |
| | | | | 12 | Fault display | | | |
| | | | | 13 | Direction of motor rotation select | | | |
| | | | | 14 | Output current 2 | | | |
| | | | | 15 | Motor rpm 2 | | | |
| | | | | 16 | Inverter DC link voltage 2 | | | |
| | | | | 17 | User display select 2 | | | |
| H73 | A349 | [Monitoring item select] | 0 ~ 2 | One of the following can be monitored via vOL - [User display select]. | | 0 | O | 9-2 |
| | | | | 0 | Output voltage [V] | | | |
| | | | | 1 | Output power [kW] | | | |
| | | | | 2 | Torque [kgf · m] | | | |
| H74 | A34A | [Gain for Motor rpm display] | 1 ~ 1000 [%] | This parameter is used to change the motor rotating speed (r/min) to mechanical speed (m/mi) and display it. | | 100 | O | 9-1 |
| H75 | A34B | [DB resistor operating rate limit select] | 0 ~ 1 | 0 | Unlimited | 1 | O | 10-8 |
| | | | | 1 | Use DB resistor for the H76 set time. | | | |
| H76 | A34C | [DB resistor operating rate] | 0 ~ 30[%] | Set the percent of DB resistor operating rate to be activated during one sequence of operation. | | 10 | O | |

| | | | | | | | | |
|---|---|---|---|---|---|---|---|---|
| **H77**[1)] | A34D | [Cooling fan control] | 0 ~ 1 | 0 | Always ON | 0 | O | 8-30 |
| | | | | 1 | Keeps ON when its temp is higher than inverter protection limit temp.<br>Activated only during operation when its temp is below that of inverter protection limit. | | | |
| H78 | A34E | [Operating method select when cooling fan malfunctions] | 0 ~ 1 | 0 | Continuous operation when cooling fan malfunctions. | 0 | O | 8-31 |
| | | | | 1 | Operation stopped when cooling fan malfunctions. | | | |
| H79 | A34F | [S/W version] | 0 ~ 10.0 | This parameter displays the inverter software version. | | 1.0 | X | - |
| H81[2)] | A351 | [2nd motor Accel time] | 0 ~ 6000 [sec] | This parameter actives when the selected terminal is ON after I17-I24 is set to 12 {2nd motor select}. | | 5.0 | O | 8-21 |
| H82 | A352 | [2nd motor Decel time] | | | | 10.0 | O | |
| H83 | A353 | [2nd motor base frequency] | 30 ~ 400 [Hz] | | | 60.00 | X | |
| H84 | A354 | [2nd motor V/F pattern] | 0 ~ 2 | | | 0 | X | |
| H85 | A355 | [2nd motor forward torque boost] | 0 ~ 15 [%] | | | 5 | X | |
| H86 | A356 | [2nd motor reverse torque boost] | | | | 5 | X | |
| H87 | A347 | [2nd motor stall prevention level] | 30~150 [%] | | | 150 | X | 8-21 |

1) Exception: Since SV004iG5A-2/SV004iG5A-4 is Natural convection type, this code is hidden.
2): It is indicated when choosing I17~I24 as a 12 (2nd motor select).

| | | | | | | | | |
|---|---|---|---|---|---|---|---|---|
| H88 | A358 | [2nd motor Electronic thermal level for 1 min] | 50~200 [%] | | | 150 | O | |
| H89 | A359 | [2nd motor Electronic thermal level for continuous] | 50~150 [%] | | | 100 | O | |
| H90 | A35A | [2nd motor rated current] | 0.1~100 [A] | | | 26.3 | X | |
| H91[1)] | A35B | [Parameter read] | 0 ~ 1 | Copy the parameters from inverter and save them into remote loader. | | 0 | X | 8-32 |

| | | | | | | | |
|---|---|---|---|---|---|---|---|
| H92 | A35C | [Parameter write] | 0 ~ 1 | Copy the parameters from remote loader and save them into inverter. | 0 | X | |
| H93 | A35D | [Parameter initialize] | 0 ~ 5 | This parameter is used to initialize parameters back to the factory default value.<br>0 -<br>1 All parameter groups are initialized to factory default value.<br>2 Only Drive group is initialized.<br>3 Only Function group 1 is initialized.<br>4 Only Function group 2 is initialized.<br>5 Only I/O group is initialized. | 0 | X | 8-32 |
| H94 | A35E | [Password register] | 0 ~ FFFF | Password for H95-[Parameter lock]. Set as Hexa value. | 0 | O | 8-33 |
| H95 | A35F | [Parameter lock] | 0 ~ FFFF | This parameter is able to lock or unlock parameters by typing password registered in H94.<br>UL (Unlock) Parameter change enable<br>L (Lock) Parameter change disable | 0 | O | 8-33 |

1) H91,H92 parameters are displayed when Remote option is installed.

Input/output group

| LED display | Address for communication | Parameter name | Min/Max range | Description | Factory defaults | Adj. during run | Page |
|---|---|---|---|---|---|---|---|
| I 0 | A400 | [Jump code] | 0 ~ 87 | Sets the code number to jump. | 1 | O | 4-5 |
| I 2 | A402 | [NV input Min voltage] | 0 ~ -10 [V] | Sets the minimum voltage of the NV (-10V~0V) input. | 0.00 | O | 7-2 |
| I 3 | A403 | [Frequency corresponding to I 2] | 0 ~ 400 [Hz] | Sets the inverter output minimum frequency at minimum voltage of the NV input. | 0.00 | O | |
| I 4 | A404 | [NV input Max voltage] | 0 ~ -10 [V] | Sets the maximum voltage of the NV input. | 10.0 | O | |
| I 5 | A405 | [Frequency corresponding to I 4] | 0 ~ 400 [Hz] | Sets the inverter output maximum frequency at maximum voltage of the NV input. | 60.00 | O | |
| I 6 | A406 | [Filter time constant for V1 input] | 0 ~ 9999 | Adjusts the responsiveness of V1 input (0 ~ +10V). | 10 | O | 7-2 |
| I 7 | A407 | [V1 input Min voltage] | 0 ~ 10 [V] | Sets the minimum voltage of the V1 input. | 0 | O | |
| I 8 | A408 | [Frequency corresponding to I 7] | 0 ~ 400 [Hz] | Sets the inverter output minimum frequency at minimum voltage of the V1 input. | 0.00 | O | |
| I 9 | A409 | [V1 input Max voltage] | 0 ~ 10 [V] | Sets the maximum voltage of the V1 input. | 10 | O | |
| I10 | A40A | [Frequency corresponding to I 9] | 0 ~ 400 [Hz] | Sets the inverter output maximum frequency at maximum voltage of the V1 input. | 60.00 | O | |
| I11 | A40B | [Filter time constant for I input] | 0 ~ 9999 | Sets the input section's internal filter constant for I input. | 10 | O | 7-4 |
| I12 | A40C | [I input Min current] | 0 ~ 20 [mA] | Sets the minimum current of I input. | 4.00 | O | |
| I13 | A40D | [Frequency corresponding to I 12] | 0 ~ 400 [Hz] | Sets the inverter output minimum frequency at minimum current of I input. | 0.00 | O | |
| I14 | A40E | [I input Max current] | 0 ~ 20 [mA] | Sets the Maximum current of I input. | 20.00 | O | |
| I15 | A40F | [Frequency corresponding to I 14] | 0 ~ 400 [Hz] | Sets the inverter output maximum frequency at maximum current of I input. | 60.00 | O | 7-4 |
| I16 | A410 | [Criteria for Analog Input Signal loss] | 0 ~ 2 | 0: Disabled<br>1: activated below half of set value.<br>2: activated below set value. | 0 | O | 10-7 |
| I17 | A411 | [Multi-function input terminal P1 define] | 0 ~ 27 | 0 Forward run command<br>1 Reverse run command | 0 | O | 7-8 |
| I18 | A412 | [Multi-function input terminal P2 define] | | 2 Emergency Stop Trip<br>3 Reset when a fault occurs {RST} | 1 | O | -<br>- |

| LED display | Address for communication | Parameter name | Min/Max range | Description | | | Factory defaults | Adj. during run | Page |
|---|---|---|---|---|---|---|---|---|---|
| I19 | A413 | [Multi-function input terminal P3 define] | | 4 | Jog operation command | | 2 | O | 8-3 |
| | | | | 5 | Multi-Step freq – Low | | | | 7-7 |
| I20 | A414 | [Multi-function input terminal P4 define] | | 6 | Multi-Step freq – Mid | | 3 | O | |
| | | | | 7 | Multi-Step freq – High | | | | |
| I21 | A415 | [Multi-function input terminal P5 define] | | 8 | Multi Accel/Decel – Low | | 4 | O | 7-14 |
| | | | | 9 | Multi Accel/Decel – Mid | | | | |
| I22 | A416 | [Multi-function input terminal P6 define] | | 10 | Multi Accel/Decel – High | | 5 | O | |
| | | | | 11 | DC brake during stop | | | | 8-2 |
| I23 | A417 | [Multi-function input terminal P7 define] | | 12 | 2nd motor select | | 6 | O | 8-21 |
| | | | | 13 | -Reserved- | | | | - |
| I24 | A418 | [Multi-function input terminal P8 define] | | 14 | -Reserved- | | 7 | O | - |
| | | | | 15 | Up-down | Frequency increase (UP) command | | | 8-4 |
| | | | | 16 | | Frequency decrease command (DOWN) | | | |
| | | | | 17 | 3-wire operation | | | | 8-7 |
| | | | | 18 | External trip: A Contact (EtA) | | | | 10-5 |
| | | | | 19 | External trip: B Contact (EtB) | | | | |
| | | | | 20 | Self-diagnostic function | | | | 8-22 |
| | | | | 21 | Change from PID operation to V/F operation | | | | 8-10 |
| | | | | 22 | 2nd Source | | | | 8-24 |
| | | | | 23 | Analog Hold | | | | 7-6 |
| | | | | 24 | Accel/Decel Disable | | | | 7-16 |
| | | | | 25 | Up/Down Save Freq. Initialization | | | | 8-4 |
| | | | | 26 | JOG-FX | | | | 8-3 |
| | | | | 27 | JOG-RX | | | | |

* See “Chapter 14 Troubleshooting and maintenance” for External trip A/B contact.

* Each multi-function input terminal must be set differently.

- Input/output group

| LED display | Address for communication | Parameter name | Min/Max range | Description | Factory default | Adj. during run | Page |
|---|---|---|---|---|---|---|---|
| I25 | A419 | [Input terminal status display] | BIT 7 / BIT 6 / BIT 5 / BIT 4 / BIT 3 / BIT 2 / BIT 1 / BIT 0<br>P8 / P7 / P6 / P5 / P4 / P3 / P2 / P1 | | 0 | O | 9-3 |
| I26 | A41A | [Output terminal status display] | BIT1 / BIT0<br>3AC / MO | | 0 | O | 9-3 |
| I27 | A41B | [Filtering time constant for Multi-function Input terminal] | 1 ~ 15 | If the value is set higher, the responsiveness of the Input terminal is getting slower. | 4 | O | - |
| I30 | A41E | [Multi-Step frequency 4] | 0 ~ 400 [Hz] | It cannot be set greater than F21 – [Max frequency]. | 30.00 | O | 7-7 |
| I31 | A41F | [Multi-Step frequency 5] | | | 25.00 | O | |
| I32 | A420 | [Multi-Step frequency 6] | | | 20.00 | O | |
| I33 | A421 | [Multi-Step frequency 7] | | | 15.00 | O | |
| I34 | A422 | [Multi-Accel time 1] | 0~ 6000 [sec] | | 3.0 | O | 7-14 |
| I35 | A423 | [Multi-Decel time 1] | | | 3.0 | | |
| I36 | A424 | [Multi-Accel time 2] | | | 4.0 | | |
| I37 | A425 | [Multi-Decel time 2] | | | 4.0 | | |
| I38 | A426 | [Multi-Accel time 3] | | | 5.0 | | |
| I39 | A427 | [Multi-Decel time 3] | | | 5.0 | | |
| I40 | A428 | [Multi-Accel time 4] | | | 6.0 | | |
| I41 | A429 | [Multi-Decel time 4] | | | 6.0 | | |

| LED display | Address for communication | Parameter name | Min/Max range | Description | | | | Factory default | Adj. during run | Page |
|---|---|---|---|---|---|---|---|---|---|---|
| I42 | A42A | [Multi-Accel time 5] | | | | | | 7.0 | | |
| I43 | A42B | [Multi-Decel time 5] | | | | | | 7.0 | | |
| I44 | A42C | [Multi-Accel time 6] | | | | | | 8.0 | | |
| I45 | A42D | [Multi-Decel time 6] | | | | | | 8.0 | | |
| I46 | A42E | [Multi-Accel time 7] | | | | | | 9.0 | | |
| I47 | A42F | [Multi-Decel time 7] | | | | | | 9.0 | | |
| I50 | A432 | [Analog output item select] | 0 ~ 3 | | Output item | Output to 10[V] | | 0 | O | 9-6 |
| | | | | | | 200V | 400V | | | |
| | | | | 0 | Output freq. | Max frequency | | | | |
| | | | | 1 | Output current | 150 % | | | | |
| | | | | 2 | Output voltage | AC 282V | AC 564V | | | |
| | | | | 3 | Inverter DC link voltage | DC 400V | DC 800V | | | |
| I51 | A433 | [Analog output level adjustment] | 10~200 [%] | Based on 10V. | | | | 100 | O | 9-6 |
| I52 | A434 | [Frequency detection level] | 0 ~ 400 [Hz] | Used when I54 or I55 is set to 0-4. Cannot be set higher than F21. | | | | 30.00 | O | 9-7 |
| I53 | A435 | [Frequency detection bandwidth] | | | | | | 10.00 | O | |
| I54 | A436 | [Multi-function output terminal select] | 0 ~ 19 | 0 | FDT-1 | | | 12 | O | 9-8 |
| | | | | 1 | FDT-2 | | | | | |
| | | | | 2 | FDT-3 | | | | | 9-9 |
| | | | | 3 | FDT-4 | | | 17 | | |
| I55 | A437 | [Multi-function relay select] | | 4 | FDT-5 | | | | | 9-10 |
| | | | | 5 | Overload (OLt) | | | | | 9-10 |
| | | | | 6 | Inverter Overload (IOLt) | | | | | |
| | | | | 7 | Motor stall (STALL) | | | | | |
| | | | | 8 | Over voltage trip (Ovt) | | | | | |

| LED display | Address for communication | Parameter name | Min/Max range | Description | | Factory default | Adj. during run | Page |
|---|---|---|---|---|---|---|---|---|
| | | | | 9 | Low voltage trip (Lvt) | | | |
| | | | | 10 | Inverter Overheat (OHt) | | | |
| | | | | 11 | Command loss | | | |
| | | | | 12 | During Run | | | 9-11 |
| | | | | 13 | During Stop | | | |
| | | | | 14 | During constant run | | | |
| | | | | 15 | During speed searching | | | |
| | | | | 16 | Wait time for run signal input | | | |
| | | | | 17 | Multi-function relay select | | | |
| | | | | 18 | Warning for cooling fan trip | | | |
| | | | | 19 | Brake signal select | | | |

| LED display | Address for communication | Parameter name | Min/Max range | Description | Factory defaults | Adj. during run | Page |
|---|---|---|---|---|---|---|---|
| I56 | A438 | [Fault relay output] | 0 ~ 7 | | 2 | O | 9-7 |

| | When setting the H26–[Number of auto restart try] | When the trip other than low voltage trip occurs | When the low voltage trip occurs |
|---|---|---|---|
| | Bit 2 | Bit 1 | Bit 0 |
| 0 | - | - | - |
| 1 | - | - | ✓ |
| 2 | - | ✓ | - |
| 3 | - | ✓ | ✓ |
| 4 | ✓ | - | - |
| 5 | ✓ | - | ✓ |
| 6 | ✓ | ✓ | - |
| 7 | ✓ | ✓ | ✓ |

| | | | | | |
|---|---|---|---|---|---|
| I57 | A439 | [Output terminal select when communication error occurs] | 0 ~ 3 | 0 | O | 9-12 |

| | Multi-function relay | Multi-function output terminal |
|---|---|---|
| | Bit 1 | Bit 0 |
| 0 | - | - |
| 1 | - | ✓ |
| 2 | ✓ | - |
| 3 | ✓ | ✓ |

| | | | | | | |
|---|---|---|---|---|---|---|
| I59 | A43B | [Communication protocol select] | 0 ~ 1 | 0 | X | 11-2 |

| | |
|---|---|
| | Set communication protocol. |
| 0 | Modbus RTU |
| 1 | LS BUS |

| | | | | | | |
|---|---|---|---|---|---|---|
| I60 | A43C | [Inverter number] | 1 ~ 250 | Set for RS485 communication | 1 | O | 11-2 |
| I61 | A43D | [Baud rate] | 0 ~ 4 | Select the Baud rate of the RS485. | 3 | O | 11-2 |

| | |
|---|---|
| 0 | 1200 [bps] |
| 1 | 2400 [bps] |
| 2 | 4800 [bps] |
| 3 | 9600 [bps] |
| 4 | 19200 [bps] |

| | | | | | | |
|---|---|---|---|---|---|---|
| I62 | A43E | [Drive mode select after loss of frequency command] | 0 ~ 2 | It is used when freq command is given via V1 /I terminal or RS485. | 0 | O | 10-7 |

| | |
|---|---|
| 0 | Continuous operation at the frequency before its command is lost. |
| 1 | Free Run stop (Output cut-off) |
| 2 | Decel to stop |

| | | | | | | | |
|---|---|---|---|---|---|---|---|
| I63 | A43F | [Wait time after loss of frequency command] | 0.1 ~ 120 [sec] | This is the time inverter determines whether there is the input frequency command or not. If there is no frequency command input during this time, inverter starts operation via the mode selected at I62. | 1.0 | O | 10-7 |

| | | | | | | | |
|---|---|---|---|---|---|---|---|
| I64 | A440 | [Communication time setting] | 2 ~ 100 [ms] | Frame communication time | 5 | O | - |
| I65 | A441 | [Parity/stop bit setting] | 0~3 | When the protocol is set, the communication format can be set.<br>0 Parity: None, Stop Bit: 1<br>1 Parity: None, Stop Bit: 2<br>2 Parity: Even, Stop Bit: 1<br>3 Parity: Odd, Stop Bit: 1 | O | O | - |
| I66 | A442 | [Read address register 1] | 0~42239 | The user can register up to 8 discontinuous addresses and read them all with one Read command. | 5 | O | 11-11 |
| I67 | A443 | [Read address register 2] | | | 6 | | |
| I68 | A444 | [Read address register 3] | | | 7 | | |
| I69 | A445 | [Read address register 4] | | | 8 | | |
| I70 | A446 | [Read address register 5] | | | 9 | | |
| I71 | A447 | [Read address register 6] | | | 10 | | |
| I72 | A448 | [Read address register 7] | | | 11 | | |
| I73 | A449 | [Read address register 8] | | | 12 | | |
| I74 | A44A | [Write address register 1] | 0~42239 | The user can register up to 8 discontinuous addresses and write them all with one Write command | 5 | O | 11-11 |
| I75 | A44B | [Write address register 2] | | | 6 | | |
| I76 | A44C | [Write address register 3] | | | 7 | | |
| I77 | A44D | [Write address register 4] | | | 8 | | |
| I78 | A44E | [Write address register 5] | | | 5 | | |

| | | | | | | | |
|---|---|---|---|---|---|---|---|
| I79 | A44F | [Write address register 6] | | | 6 | | |
| I80 | A450 | [Write address register 7] | | | 7 | | |
| I81 | A451 | [Write address register 8] | | | 8 | | |
| 182[1)] | A452 | [Brake open current] | 0~180 [%] | Sets current level to open the brake. It is set according to H33's (motor rated current) size | 50.0 | O | 8-26 |
| 183 | A453 | [Brake open delay time] | 0~10 [s] | Sets Brake open delay time. | 1.00 | X | |
| 184 | A454 | [Brake open FX frequency] | 0~400 [Hz] | Sets FX frequency to open the brake | 1.00 | X | |
| 185 | A455 | [Brake open RX frequency] | 0~400 [Hz] | Sets RX frequency to open the brake | 1.00 | X | |
| 186 | A456 | [Brake close delay time] | 0~19 [s] | Sets delay time to close the brake | 1.00 | X | |
| 187 | A457 | [Brake close frequency | 0~400 [Hz] | Sets frequency to close the brake | 2.00 | X | |

1): It is indicated when choosing I54~I55 as a 19 (Brake signal).

# CHAPTER 6 - CONTROL BLOCK DIAGRAM

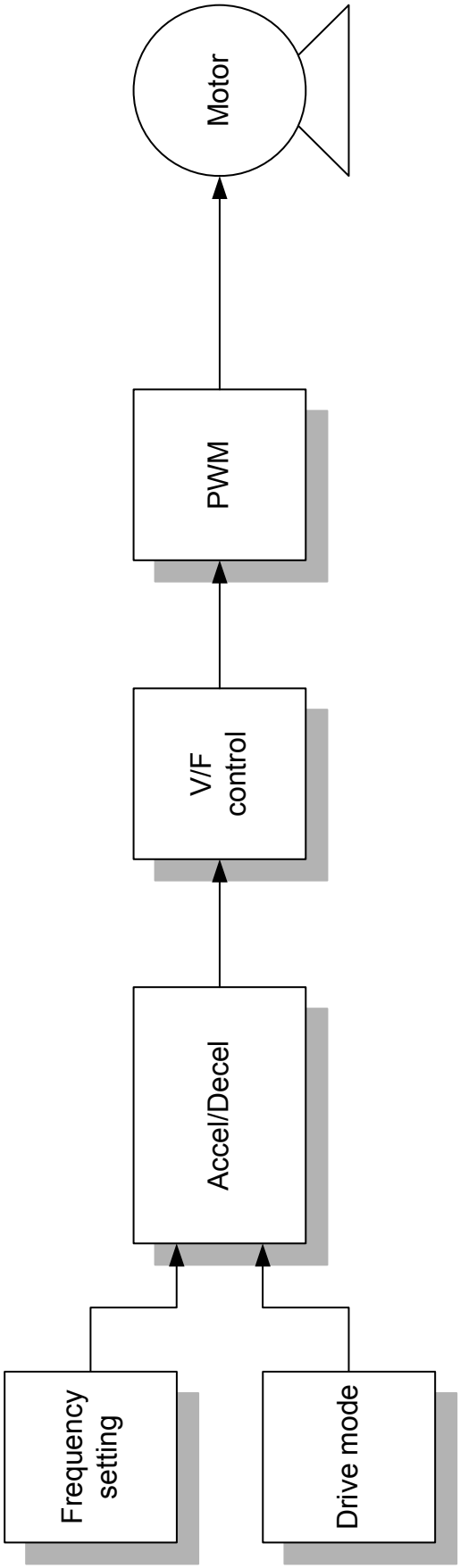

## 6.1 Frequency setting

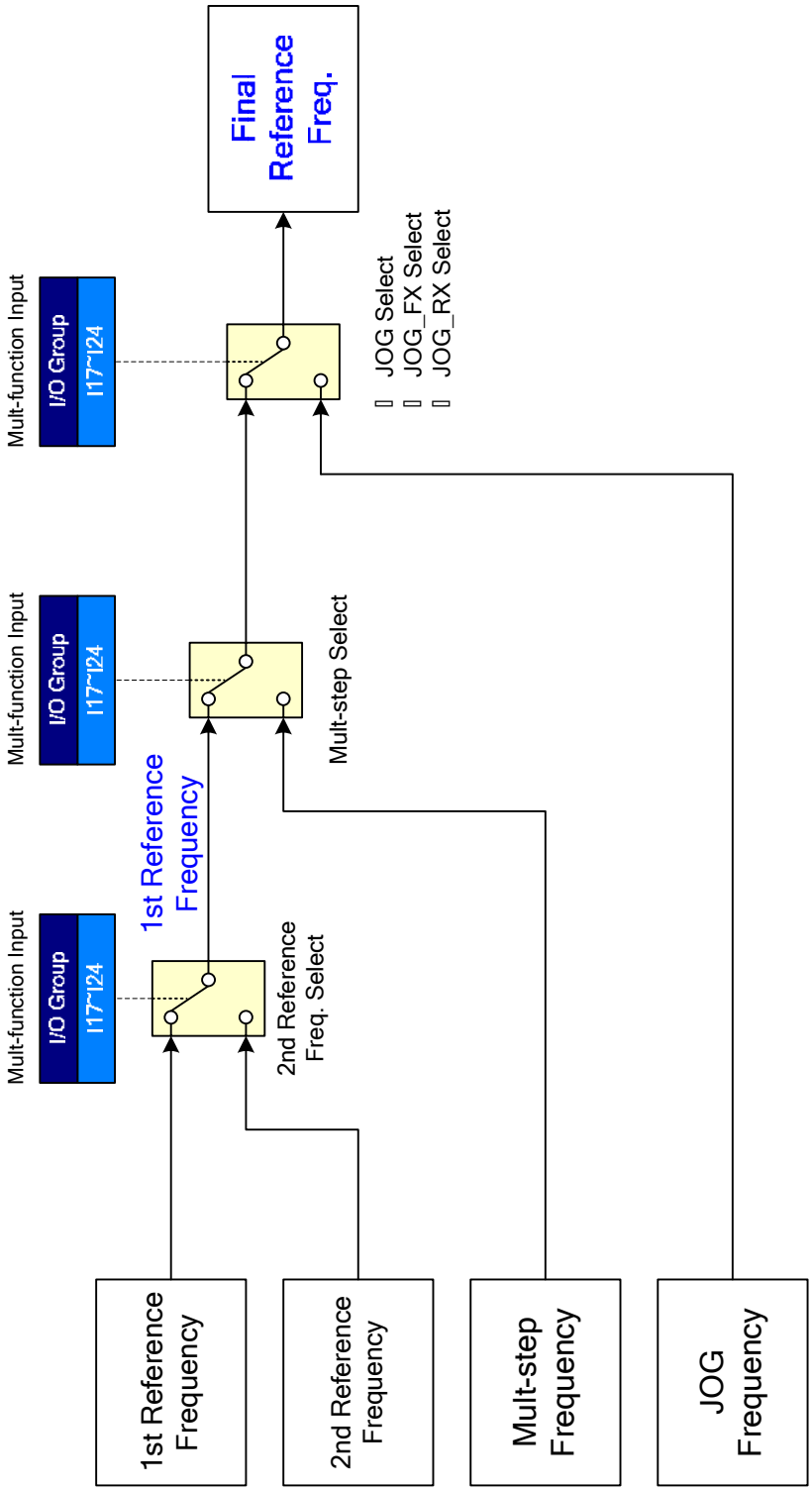

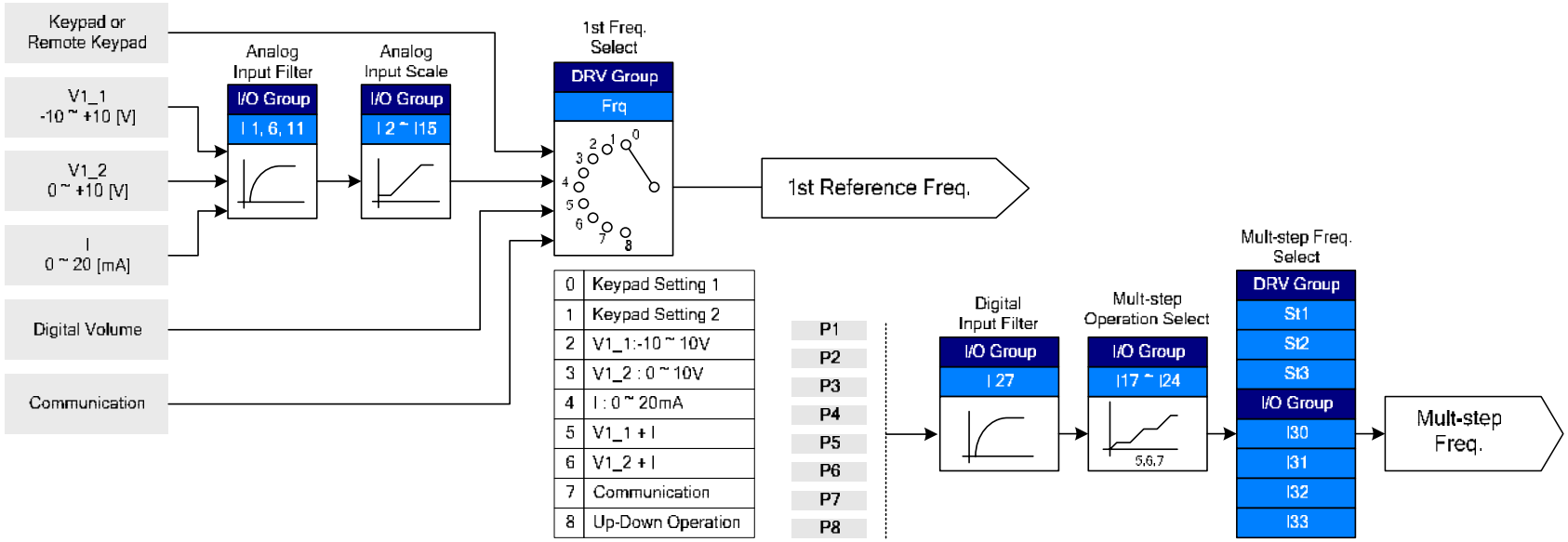


| | |
|---|---|
| 0 | Keypad Setting 1 |
| 1 | Keypad Setting 2 |
| 2 | V1_1:-10 ~ 10V |
| 3 | V1_2 : 0 ~ 10V |
| 4 | I : 0 ~ 20mA |
| 5 | V1_1 + I |
| 6 | V1_2 + I |
| 7 | Communication |
| 8 | Up-Down Operation |

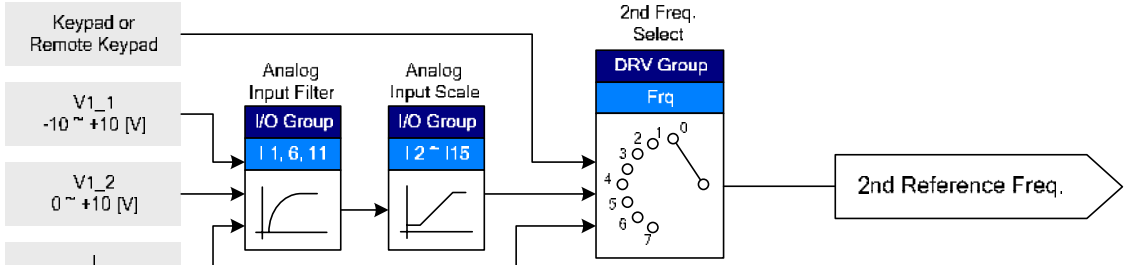


| | |
|---|---|
| 0 | Keypad Setting 1 |
| 1 | Keypad Setting 2 |
| 2 | V1_1:-10 ~ 10V |
| 3 | V1_2 : 0 ~ 10V |
| 4 | I : 0 ~ 20mA |
| 5 | V1_1 + I |
| 6 | V1_2 + I |
| 7 | Communication |

## 6.2 Drive command setting

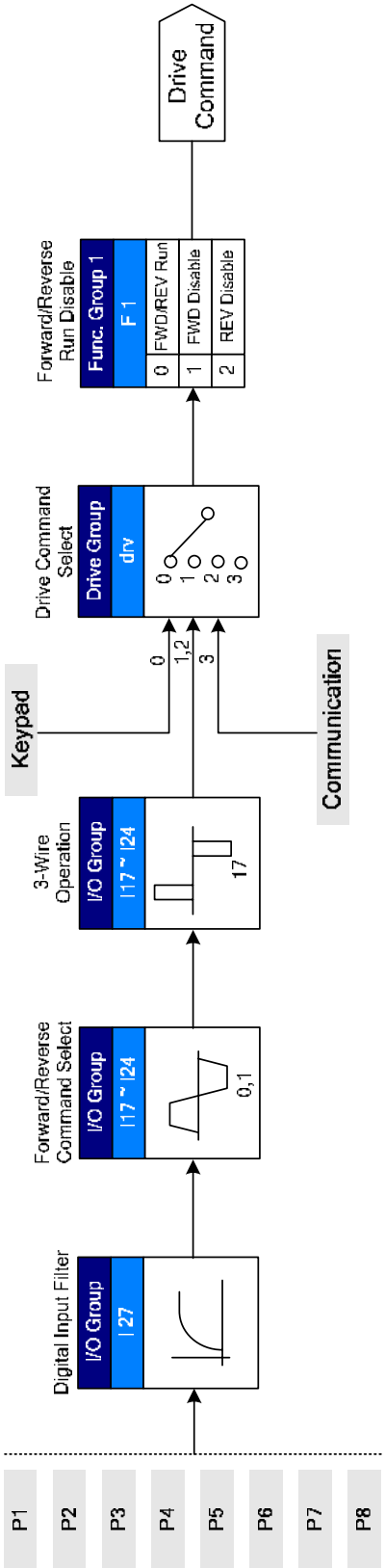

## 6.3 Accel/Decel setting and V/F control

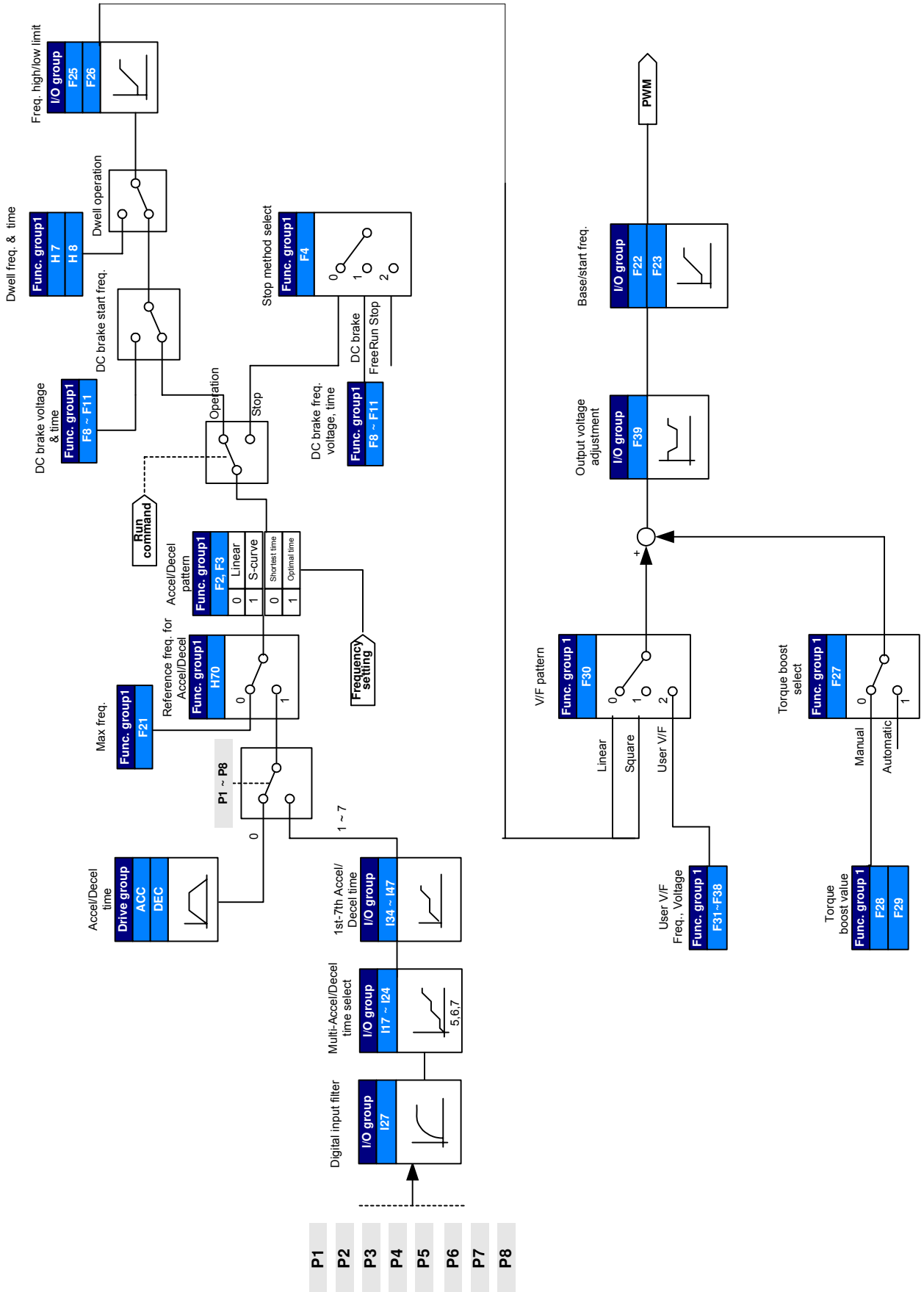

# CHAPTER 7 - BASIC FUNCTIONS

## 7.1 Frequency mode

- Keypad Frequency setting 1

| Group | Code | Parameter Name | Setting | Range | Initial | Unit |
|---|---|---|---|---|---|---|
| Drive group | 0.00 | [Frequency Command] | - | 0 ~ 400 | 0.00 | Hz |
| | **Frq** | **[Frequency mode]** | **0** | 0 ~ 8 | 0 | |

▪

▪ Set **Frq** – [Frequency mode] to 0 {Frequency setting via Keypad 1}.
▪ Set the desired frequency in **0.00** and press the Prog/Ent (●) key to enter the value into memory.
▪ The value is settable less than **F21** – [Max frequency].

▸ When remote keypad is connected, keypad keys on the body are deactivated.

- Keypad Frequency setting 2

| Group | Code | Parameter Name | Setting | Range | Initial | Unit |
|---|---|---|---|---|---|---|
| Drive group | 0.00 | [Frequency Command] | - | 0 ~ 400 | 0.00 | Hz |
| | **Frq** | **[Frequency mode]** | **1** | 0 ~ 8 | 0 | |

▪ Set **Frq** – [Frequency mode] to 1{Frequency setting via Keypad 2}.
▪ In **0.00**, frequency is changed upon pressing the Up (▲)/Down (▼) key. In this case, UP/Down keys serve as a potentiometer.
▪ The value is settable less than **F21** – [Max frequency].

▸ When remote keypad is connected, keypad keys on the body are deactivated.

- Frequency setting via –10 ~ +10[V] input

| Group | Code | Parameter Name | Setting | Range | Initial | Unit |
|---|---|---|---|---|---|---|
| Drive group | 0.00 | [Frequency Command] | - | 0 ~400 | 0.00 | Hz |
| | **Frq** | **[Frequency Mode]** | **2** | 0 ~ 8 | 0 | |
| I/O group | I 2 | [NV input minimum voltage] | - | 0 ~ -10 | 0.0 | V |
| | I 3 | [Frequency corresponding to I2] | - | 0 ~ 400 | 0.00 | Hz |
| | I 4 | [NV input max voltage] | - | 0 ~ 10 | 10.00 | V |
| | I 5 | [Frequency corresponding to I4] | - | 0 ~ 400 | 60.00 | Hz |
| | I6 ~ I10 | [V1 input] | | | | |

- Set **Frq** – [Frequency Mode] to 2.
- The set frequency can be monitored in **0.00** - [Frequency Command].

---

- Apply –10V ~ +10V signal between V1 and CM terminal.
- Output frequency corresponding to –10V ~ +10V input voltage to V1 terminal

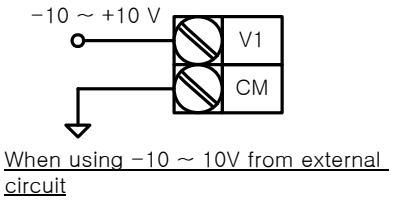


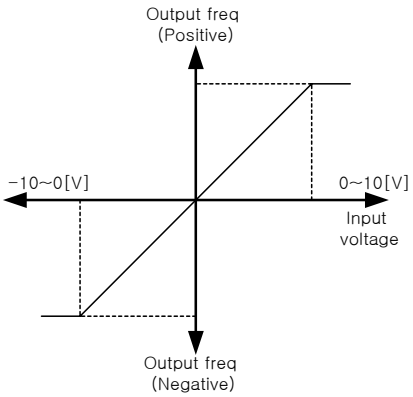


- 
- I 2 ~ I 5: Setting input range and corresponding frequency to -10V ~ 0V V1 input voltage
  Ex) when minimum (-) input voltage is -2V with corresponding frequency 10Hz and Max voltage is –8V with run freq. 50Hz.

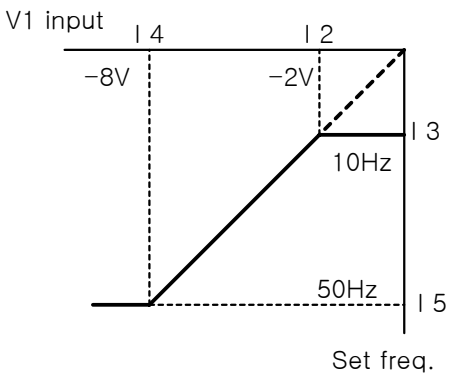

- I6 ~ I10: Setting input range and corresponding frequency to 0 ~ +10V V1 input voltage

  Ex) when minimum (+) input voltage is 2V with corresponding frequency 10Hz and Max voltage is 8V with run freq.

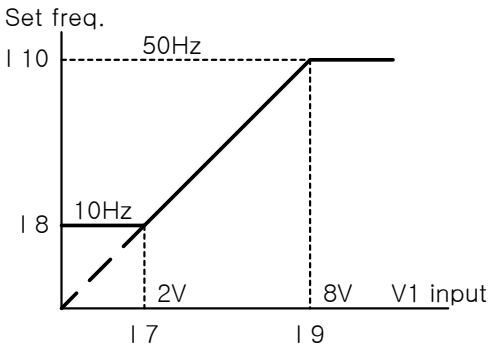


- Frequency setting via 0 ~ 10 [V] input or Terminal Potentiometer

| Group | Code | Parameter Name | Setting | Range | Initial | Unit |
|---|---|---|---|---|---|---|
| Drive group | 0.00 | [Frequency Command] | - | 0 ~400 | 0.00 | Hz |
| | **Frq** | **[Frequency Mode]** | **3** | 0 ~ 8 | 0 | |
| I/O group | I 6 | [Filter time constant for V1 input] | 10 | 0 ~ 9999 | 10 | |
| | I 7 | [V1 input Min voltage] | - | 0 ~ 10 | 0 | V |
| | I 8 | [Frequency corresponding to I 7] | - | 0 ~ 400 | 0.00 | Hz |
| | I 9 | [V1 input max voltage] | - | 0 ~ 10 | 10 | V |
| | I10 | [Frequency corresponding to I 9] | - | 0 ~ 400 | 60.00 | Hz |

  - Select 3 in Frq code of Drive group.
  - 0-10V can be directly applied from an external controller or a potentiometer connected on terminals VR, V1 and CM.

- Wire the terminals as shown below and refer to I 6 ~ I 10.

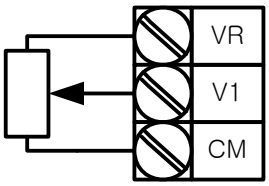


Wiring of potentiometer

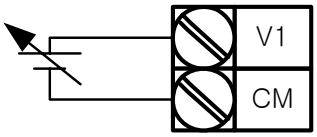


0 ~ 10V input via external controller

- Frequency setting via 0 ~ 20 [mA] input

| Group | Code | Parameter Name | Setting | Range | Initial | Unit |
|---|---|---|---|---|---|---|
| Drive group | 0.00 | [Frequency Command] | - | 0 ~400 | 0.00 | Hz |
| | **Frq** | **[Frequency Mode]** | **4** | 0 ~ 8 | 0 | |
| I/O group | I11 | [Filter time constant for I input] | 10 | 0 ~ 9999 | 10 | |
| | I12 | [I input minimum current] | - | 0 ~ 20 | 4 | mA |
| | I13 | [Frequency corresponding to I12] | - | 0 ~ 400 | 0.00 | Hz |
| | I14 | [I input max current] | - | 0 ~ 20 | 20 | mA |
| | I15 | [Frequency corresponding to I14] | - | 0 ~ 400 | 60.00 | Hz |

- Select 4 in Frq code of Drive group.
- Frequency is set via 0~20mA input between I and CM terminal.

- Frequency setting via -10 ~ +10[V] voltage input + 0 ~ 20[mA] input

| Group | Code | Parameter Name | Setting | Range | Initial | Unit |
|---|---|---|---|---|---|---|
| Drive group | 0.00 | [Frequency Command] | - | 0 ~400 | 0.00 | Hz |
| | **Frq** | **[Frequency Mode]** | **5** | 0 ~ 8 | 0 | |

- Select 5 in Frq code of Drive group.
- Override function available using Main/Auxiliary speed adjustment
- Related code: I 2 ~ I 5, I 6 ~ I10, I11 ~ I15

- Override function is to gain precise control and fast response by combining Main and Auxiliary speed input. Fast response can be achieved by Main speed and precise control can be accomplished by Aux. speed if the accuracy of Main/Aux speed is set differently.
- Follow the setting below when Main speed is given via 0 ~ 20mA with Aux. speed via V1 terminal (–10 ~ 10V).
- When override function is used, select the Main/Aux. speed according to loads used.

| Group | Code | Parameter Name | Setting | Unit |
|---|---|---|---|---|
| I/O group | I 2 | [NV input Min voltage] | 0 | V |
| | I 3 | [Frequency corresponding to I 2] | 0.00 | Hz |
| | I 4 | [NV input Max voltage] | 10.00 | V |
| | I 5 | [Frequency corresponding to I 4] | 5.00 | Hz |
| | I7 | [V1 input Min voltage] | 0 | V |
| | I 8 | [Frequency corresponding to I 7] | 0.00 | Hz |
| | I 9 | [V1 input max voltage] | 10 | V |
| | I10 | [Frequency corresponding to I 9] | 5.00 | Hz |
| | I12 | [I input minimum current] | 4 | mA |
| | I13 | [Frequency corresponding to I 12] | 0.00 | Hz |
| | I14 | [I input max current] | 20 | mA |
| | I15 | [Frequency corresponding to I 14] | 60.00 | Hz |

- After the above setting is made, if 5V is applied to V1 with 12mA given to terminal I, output frequency would be 32.5Hz. If –5V is applied to V1 terminal with 12mA given to terminal I, output frequency would be 27.5Hz.
-

● Frequency setting via 0 ~ 10[V] + 0 ~ 20[mA] input

| Group | Code | Parameter Name | Setting | Range | Initial | Unit |
|---|---|---|---|---|---|---|
| Drive group | 0.00 | [Frequency Command] | - | 0 ~400 | 0.00 | Hz |
| | **Frq** | **[Frequency Mode]** | **6** | 0 ~ 8 | 0 | |

- Select 6 in Frq code of Drive group.
- Related code: I 6 ~ I 10, I 11 ~ I 15
- Refer to Frequency setting via -10 ~ +10V voltage input + 0 ~ 20mA input.

● Frequency setting via RS 485 communication

| Group | Code | Parameter Name | Setting | Range | Initial | Unit |
|---|---|---|---|---|---|---|
| Drive group | 0.0 | [Frequency Command] | - | 0 ~400 | 0.00 | Hz |
| | **Frq** | **[Frequency Mode]** | **7** | 0 ~ 8 | 0 | |

- Select 7 in Frq code of Drive group.
- Related code: I 59, I 60, I 61
- Refer to Chapter 13. RS485 communication.

- Frequency setting via Digital Volume (up-down)

| Group | Code | Parameter Name | Setting | Range | Initial | Unit |
|---|---|---|---|---|---|---|
| Drive group | 0.0 | [Frequency Command] | - | 0 ~400 | 0.00 | Hz |
| | **Frq** | **[Frequency Mode]** | **8** | 0 ~ 8 | 0 | |

- Select 7 in Frq code of Drive group.
- Related code: I 59, I 60, I 61
- Refer to Chapter 13. RS485 communication.

- Analog Hold

| Group | Code | Parameter Name | Setting | Range | Initial | Unit |
|---|---|---|---|---|---|---|
| Drive group | **Frq** | **[Frequency Mode]** | **2 ~ 7** | 0 ~ 7 | 0 | |
| I/O group | I17 | [Multi-function input terminal P1 define] | - | 0 ~25 | 0 | |
| | ~ | ~ | | | | |
| | **I24** | **[Multi-function input terminal P8 define]** | **23** | | 7 | |

- It is available when Frq code setting is 2 ~ 7.
- Select one terminal to use for Analog Hold command among Multi-function input terminal (P1 ~ P8).

▸ When P8 terminal is selected,

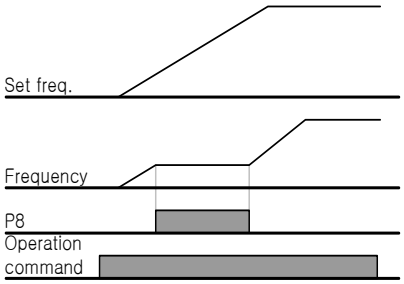

## 7.2 Multi-Step Frequency setting

| Group | Code | Parameter Name | Setting | Range | Initial | Unit |
|---|---|---|---|---|---|---|
| Drive group | 0.0 | [Frequency Command] | 5.0 | 0 ~ 400 | 0.00 | Hz |
| | Frq | [Frequency Mode] | 0 | 0 ~ 8 | 0 | - |
| | St1 | [Multi-Step frequency 1] | - | 0 ~ 400 | 10.00 | Hz |
| | St2 | [Multi-Step frequency 2] | - | | 20.00 | |
| | St3 | [Multi-Step frequency 3] | - | | 30.00 | |
| I/O group | **I22** | **[Multi-function input terminal P6 define]** | **5** | 0 ~ 24 | 5 | - |
| | **I23** | **[Multi-function input terminal P7 define]** | **6** | | 6 | - |
| | **I24** | **[Multi-function input terminal P8 define]** | **7** | | 7 | - |
| | I30 | [Multi-Step frequency 4] | - | 0 ~ 400 | 30.00 | Hz |
| | I31 | [Multi-Step frequency 5] | - | | 25.00 | |
| | I32 | [Multi-Step frequency 6] | - | | 20.00 | |
| | I33 | [Multi-Step frequency 7] | - | | 15.00 | |

- Select a terminal to give Multi-step frequency command among P1-P8 terminals.
- If terminals P6-P8 are selected, set I22-I24 to 5-7 to give Multi-step frequency command.
- Multi-step frequency 0 is settable in **Frq** – [Frequency mode] and **0.00** – [Frequency command].
- Multi-step frequency 1-3 are set at St1-St3 in Drive group, while Step frequency 4-7 are set at I30-I33 in I/O group.

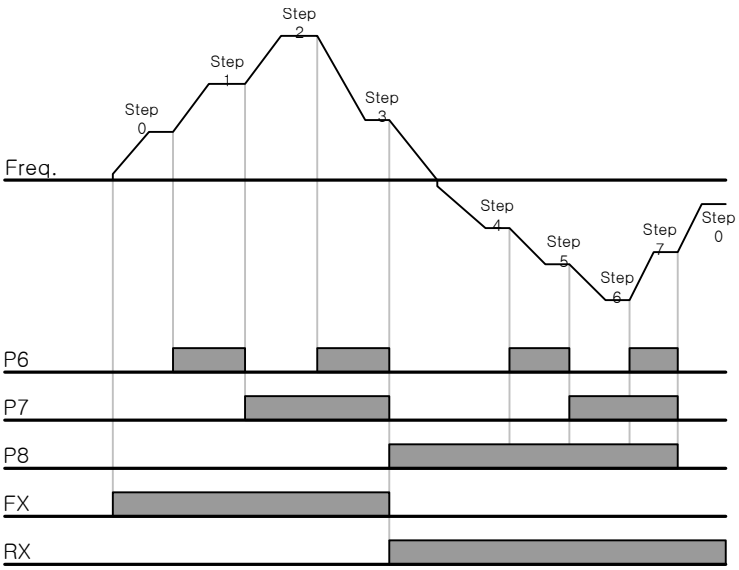


| Step freq. | FX or RX | P8 | P7 | P6 |
|---|---|---|---|---|
| 0 | ✓ | - | - | - |
| 1 | ✓ | - | - | ✓ |
| 2 | ✓ | - | ✓ | - |
| 3 | ✓ | - | ✓ | ✓ |
| 4 | ✓ | ✓ | - | - |
| 5 | ✓ | ✓ | - | ✓ |
| 6 | ✓ | ✓ | ✓ | - |
| 7 | ✓ | ✓ | ✓ | ✓ |

## 7.3 Operating command setting method

- Operation via keypad RUN key and STOP/RST key

| Group | Code | Parameter Name | Setting | Range | Initial | Unit |
|---|---|---|---|---|---|---|
| Drive group | **drv** | **[Drive mode]** | **0** | 0 ~ 3 | 1 | |
| | drC | [Direction of motor rotation select] | - | F, r | F | |

- Set **drv** – [Drive mode] to 0.
- Acceleration is started upon pressing the Run key while operating frequency is set. Motor decelerates to stop by pressing the STOP/RST key.
- Selecting rotation direction is available at drC - [Direction of motor rotation select] when operating command is issued via keypad.

| | | | |
|---|---|---|---|
| drC | [Direction of motor rotation select] | F | Forward |
| | | r | Reverse |

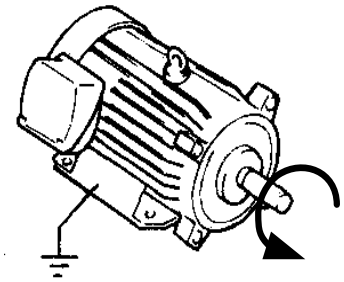

Forward : Counter-clockwise

- When remote keypad is connected, body-embedded keypad is deactivated.

- Operating command via FX, RX terminal 1

| Group | Code | Parameter Name | Setting | Range | Initial | Unit |
|---|---|---|---|---|---|---|
| Drive group | **drv** | **[Drive mode]** | **1** | 0 ~ 3 | 1 | |
| I/O group | I17 | [Multi-function input terminal P1 define] | 0 | 0 ~ 27 | 0 | |
| | I18 | [Multi-function input terminal P2 define] | 1 | 0 ~ 27 | 1 | |

- Set **drv** – [Drive mode] to 1.
- Set I17 and I18 to 0 and 1 to use P1 and P2 as FX and RX terminals.
- “FX” is Forward run command and “RX” Reverse run.

- Motor is stopped when FX/RX terminal is ON/OFF at the same time.

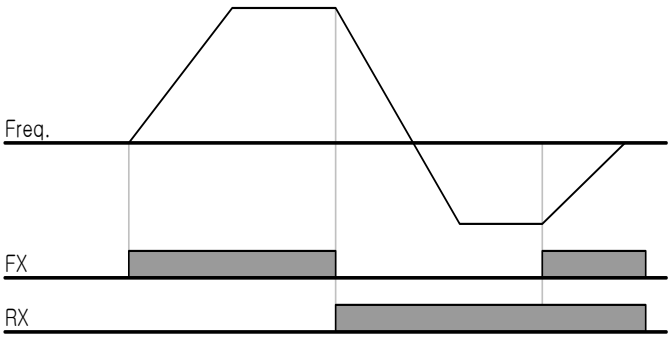

- Operating command via FX, RX terminal 2

| Group | Code | Parameter Name | Setting | Range | Initial | Unit |
|---|---|---|---|---|---|---|
| Drive group | **drv** | **[Drive mode]** | **2** | 0 ~ 3 | 1 | |
| I/O group | I17 | [Multi-function input terminal P1 define] | 0 | 0 ~ 27 | 0 | |
| | I18 | [Multi-function input terminal P2 define] | 1 | 0 ~ 27 | 1 | |

- Set the **drv** to 2.
- Set I17 and I18 to 0 and 1 to use P1 and P2 as FX and RX terminals.
- FX: Operating command setting. Motor runs in forward direction when RX terminal (P2) is OFF.
- RX: Direction of motor rotation select. Motor runs in reverse direction when RX terminal (P2) is ON.

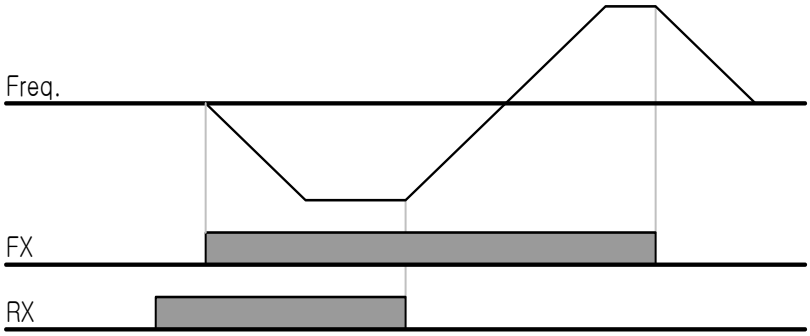


- Operating command via RS485 communication

| Group | Code | Parameter Name | Setting | Range | Initial | Unit |
|---|---|---|---|---|---|---|
| Drive group | **drv** | **[Drive mode]** | **3** | 0 ~ 3 | 1 | |
| I/O group | I59 | [Communication protocol select] | - | 0 ~ 1 | 0 | |
| | I60 | [Inverter number] | - | 1 ~ 250 | 1 | |
| | I61 | [Baud rate] | - | 0 ~ 4 | 3 | |

- Set the **drv** to 3.
- Set I59, I60 and I61correctly.
- Inverter operation is performed via RS485 communication.
- Refer to Chapter. 13, RS485 communication.

- Rotating direction select via –10 ~ +10[V] input of V1 terminal

| Group | Code | Parameter Name | Setting | Range | Initial | Unit |
|---|---|---|---|---|---|---|
| Drive group | **frq** | **[Frequency setting]** | **2** | 0 ~ 8 | 0 | |
| | drv | [Drive mode] | - | 0 ~ 3 | 1 | |

- Set **frq** to 2.
- Inverter is operating as the table below regardless of Drive mode setting.

| | FWD RUN Command | REV RUN Command |
|---|---|---|
| 0 ~ +10 [V] | FWD RUN | REV RUN |
| -10 ~ 0 [V] | REV RUN | FWD RUN |

- Motor runs in Forward direction when input voltage to V1-CM is 0~10[V] and FWD RUN command is active. When input voltage polarity is reversed to –10~0[V] during FWD RUN, motor decelerates to stop and runs in reverse direction.
- When input voltage to V1-CM is 0~10[V] and REV RUN command is active, motor runs in Reverse direction and if -10~0[V] is input, motor rotating direction is reverse.

- FX/RX Run Disable

| Group | Code | Parameter Name | Setting | Range | Initial | Unit |
|---|---|---|---|---|---|---|
| Drive group | drC | [Direction of motor rotation select] | - | F, r | F | |
| Function group 1 | **F 1** | **[Forward/Reverse run disable]** | **-** | 0 ~ 2 | 0 | |

- Select the direction of motor rotation.
- 0: Forward and Reverse run enable
- 1: Forward run disable
- 2: Reverse run disable

- Power On Start select

| Group | Code | Parameter Name | Setting | Range | Initial | Unit |
|---|---|---|---|---|---|---|
| Drive group | **drv** | **[Drive mode]** | **1, 2** | 0 ~ 3 | 1 | |
| Function group 2 | **H20** | **[Power On Start select]** | **1** | 0 ~ 1 | 0 | |

- Set H20 to 1.
- When AC input power is applied to the inverter with drv set to 1 or 2 {Run via control terminal} ON, motor starts acceleration.
- This parameter is inactive when **drv** is set to 0 {Run via keypad} or 3 {RS485 communication}.

**⚠ CAUTION**

Particular attention must be directed to this function due to potential hazard as motor starts to run suddenly upon applying AC input power.

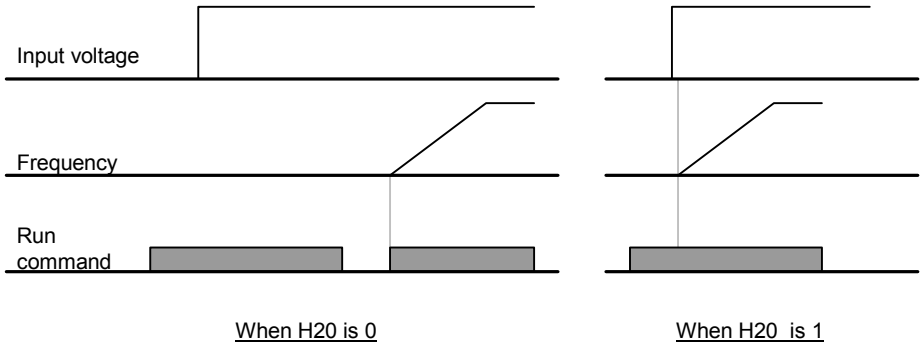


- Restart after fault reset

| Group | Code | Parameter Name | Setting | Range | Initial | Unit |
|---|---|---|---|---|---|---|
| Drive group | **drv** | **[Drive mode]** | **1, 2** | 0 ~ 3 | 1 | |
| Function group 2 | **H21** | **[Restart after fault reset selection]** | **1** | 0 ~ 1 | 0 | |

- Set H21 to 1.
- Motor starts acceleration if **drv** is set to 1 or 2 and the selected terminal is ON when a fault is cleared.
- This parameter is inactive when **drv** is set to 0 {Run via keypad} or 3 {RS485 communication}.

**⚠ CAUTION**

Particular attention must be directed to this function due to potential hazard as motor starts to run suddenly after the fault is cleared.

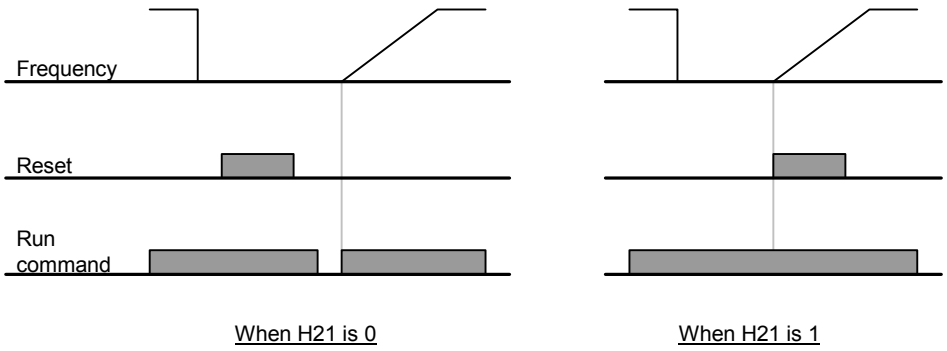


## 7.4 Accel/Decel time and pattern setting

- Accel/Decel time setting based on Max frequency

| Group | Code | Parameter Name | Setting | Range | Initial | Unit |
|---|---|---|---|---|---|---|
| Drive group | **ACC** | **[Accel time]** | **-** | 0 ~ 6000 | 5.0 | Sec |
| | **dEC** | **[Decel time]** | **-** | 0 ~ 6000 | 10.0 | Sec |
| Function group1 | F21 | [Max Frequency] | - | 40 ~ 400 | 60.00 | Hz |
| Function group2 | **H70** | **[Frequency Reference for Accel/Decel]** | **0** | 0 ~ 1 | 0 | |
| | H71 | [Accel/Decel time scale] | - | 0 ~ 2 | 1 | |

- Set the desired Accel/Decel time at ACC/dEC in Drive group.
- If H70 is set to 0 {Max frequency}, Accel/Decel time is the time that takes to reach the max freq from 0 Hz.
- Desired Accel/Decel time unit is settable at the H71.

▸ Accel/Decel time is set based on **F21** – [Max frequency]. For instance, if **F21** is set to 60Hz, Accel/Decel time 5 sec, and run frequency 30Hz, time to reach 30Hz would be 2.5 sec.

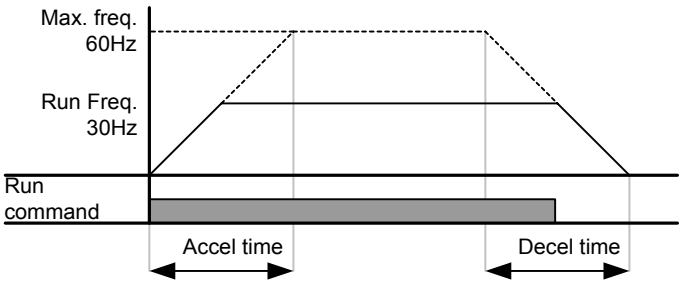

- More precise time unit can be set corresponding to load characteristics as shown below.
- In SV-iG5A, number display is available up to 5. Therefore, if time unit is set to 0.01 sec, Max Accel/Decel time would be 600.00 sec.

| Code | Name | Set value | Setting range | Description |
|---|---|---|---|---|
| H71 | [Accel/Decel time scale] | 0 | 0.01~600.00 | Setting Unit: 0.01 sec |
| | | 1 | 0.1~6000.0 | Setting Unit: 0.1 sec |
| | | 2 | 1~60000 | Setting Unit: 1 sec |

- Accel/Decel time setting based on Operating Frequency

| Group | Code | Parameter Name | Setting | Range | Initial | Unit |
|---|---|---|---|---|---|---|
| Drive group | ACC | [Accel time] | - | 0 ~ 6000 | 5.0 | Sec |
| | dEC | [Decel time] | - | 0 ~ 6000 | 10.0 | Sec |
| Function group 2 | **H70** | **[Frequency Reference for Accel/Decel]** | **1** | 0 ~ 1 | 0 | |

- Accel/Decel time is set at the **ACC/dEC**.
- If you set H70 to 1 {Delta frequency}, Accel/Decel time is the time that takes to reach a target freq from constant run freq (Current operating freq.).

- When H70 and Accel time are set to 1 {Delta frequency} and 5 sec, respectively,
- The below graph in Section A shows the change in operating frequency when target frequency is set to 10Hz at first and then changed to 30Hz.

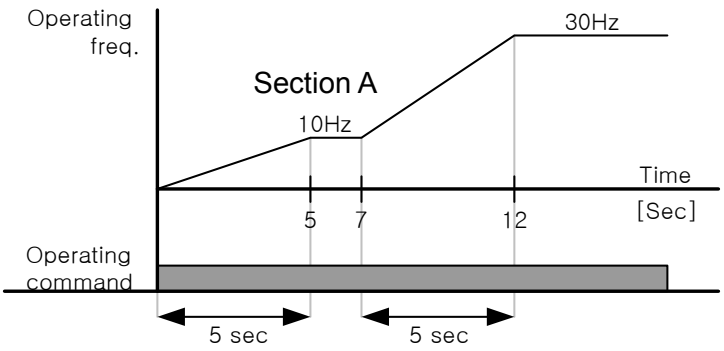

- Multi-Accel/Decel time setting via Multi-function terminals

| Group | Code | Parameter Name | Set | Range | Initial | Unit |
|---|---|---|---|---|---|---|
| Drive group | ACC | [Accel time] | - | 0 ~ 6000 | 5.0 | Sec |
| | dEC | [Decel time] | - | 0 ~ 6000 | 10.0 | Sec |
| I/O group | I17 | [Multi-function input terminal P1 define] | 0 | 0 ~ 27 | 0 | |
| | I18 | [Multi-function input terminal P12 define] | 1 | | 1 | |
| | **I19** | **[Multi-function input terminal P3 define]** | **8** | | 2 | |
| | **I20** | **[Multi-function input terminal P4 define]** | **9** | | 3 | |
| | **I21** | **[Multi-function input terminal P5 define]** | **10** | | 4 | |
| | I34 | [Multi-Accel time 1] | - | 0 ~ 6000 | 3.0 | Sec |
| | ~ | ~ | | | | |
| | I47 | [Multi-Decel time 7] | - | | 9.0 | |

- Set I19, I20, I21 to 8, 9, 10 if you want to set Multi - Accel/Decel time via P3-P5 terminals.
- Multi-Accel/Decel time 0 is settable at ACC and dEC.
- Multi-Accel/Decel time 1-7 is settable at I34-I47.

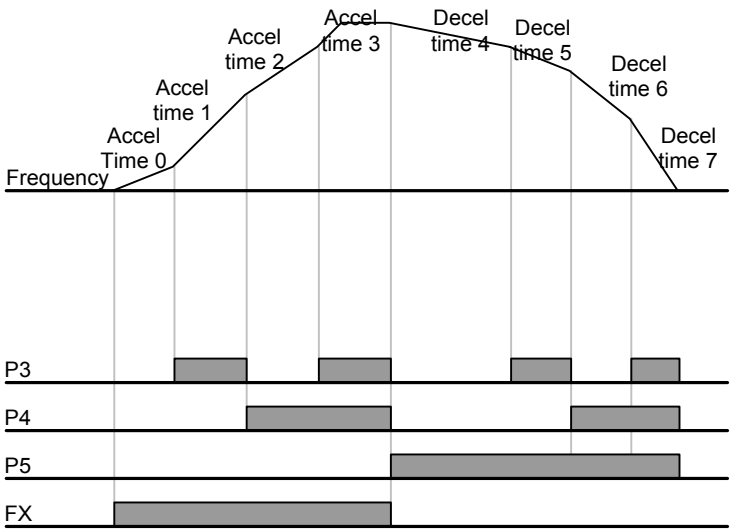


| Accel/Decel time | P5 | P4 | P3 |
|---|---|---|---|
| 0 | - | - | - |
| 1 | - | - | ✓ |
| 2 | - | ✓ | - |
| 3 | - | ✓ | ✓ |
| 4 | ✓ | - | - |
| 5 | ✓ | - | ✓ |
| 6 | ✓ | ✓ | - |
| 7 | ✓ | ✓ | ✓ |

- Accel/Decel pattern setting

| Group | Code | Parameter Name | Setting range | | Initial | Unit |
|---|---|---|---|---|---|---|
| Function group 1 | **F 2** | **[Accel pattern]** | **0** | Linear | 0 | |
| | **F 3** | **[Decel pattern]** | **1** | S-curve | | |
| Function group 2 | **H17** | **[S-Curve Accel/Decel start side]** | **0~ 100** | | 40 | % |
| | **H18** | **[S-Curve Accel/Decel end side]** | | | 40 | % |

- Accel/Decel pattern is settable at F2 and F3.
- Linear: This is a general pattern for constant torque applications.
- S-curve: This curve allows the motor to accelerate and decelerate smoothly.

| ⚠CAUTION |
|---|
| For S-curve, the actual Accel/Decel time takes longer than the time set by user. |

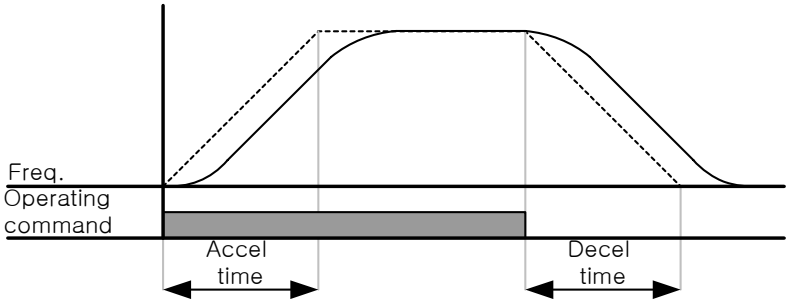


- H17 sets the starting ratio between S-curve and Linear in 1/2 of Accel/Decel Ref. Frequency. For smooth Accel/Decel starting, increase H17 to extend S-curve ratio.
- H18 sets the ending ratio between S-curve and Linear in 1/2 of Accel/Decel Ref. Frequency. For smooth and accurate speed arrival and stopping, increase H18 to extend S-curve ratio.

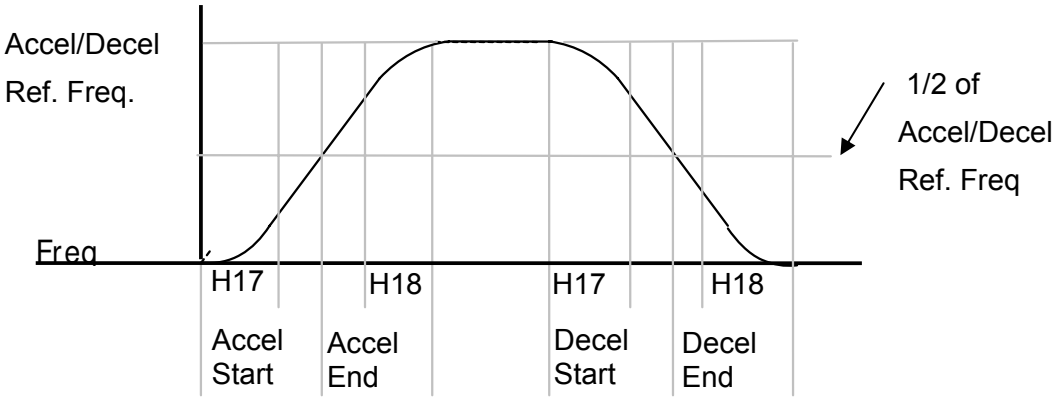

- Note that setting Frequency Ref. for Accel/decel (H70) is set to Max Freq and target freq is set below Max freq. the shape of S-curve may be distorted.

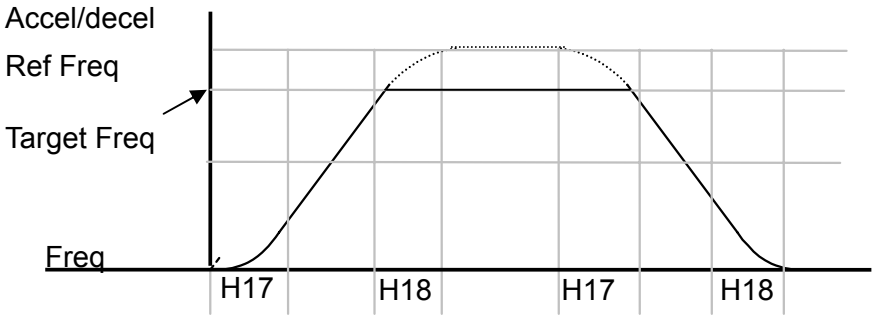


| ⚠CAUTION |
|---|
| If Target Frequency is below Max Frequency, the waveform will be shown with the top portion cut out. |

- Accel time for S-curve setting

$$= ACC + ACC \times \frac{H17}{2} + ACC \times \frac{H18}{2}$$

- Decel time for S-curve setting

$$= dEC + dEC \times \frac{H17}{2} + dEC \times \frac{H18}{2}$$

- ACC, dEC indicate the set time in Drive group.

● Accel/Decel Disable

| Group | Code | Parameter Name | Setting | Range | Initial | Unit |
|---|---|---|---|---|---|---|
| I/O group | I17 | [Multi-function input terminal P1 define] | - | 0 ~27 | 0 | |
| | ~ | ~ | | | | |
| | **I24** | **[Multi-function input terminal P8 define]** | **24** | | 7 | |

- Select one terminal among Multi-function input terminals 1-8 to define Accel/Decel disable.
- If P8 is selected, set I24 to 24 to activate this function.

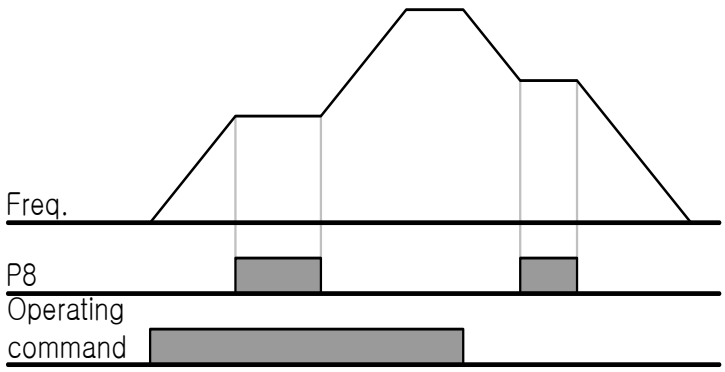

## 7.5 V/F control

- Linear V/F pattern operation

| Group | Code | Parameter Name | Setting | Range | Initial | Unit |
|---|---|---|---|---|---|---|
| Function group 1 | F22 | [Base frequency] | - | 30 ~ 400 | 60.00 | Hz |
| | F23 | [Start frequency] | - | 0.1 ~ 10.0 | 0.50 | Hz |
| | **F30** | **[V/F pattern]** | **0** | 0 ~ 2 | 0 | |
| Function group 2 | H40 | [Control mode select] | - | 0 ~ 3 | 0 | |

- Set F30 to 0 {Linear}.
- This pattern maintains a linear Volts/frequency ratio from F23 - [Start frequency] to F22-[Base frequency]. This is appropriate for constant torque applications.

- Base Frequency: Inverter outputs its rated voltage at this level. Enter the motor nameplate frequency.
- Start Frequency: Inverter starts to output its voltage at this level.

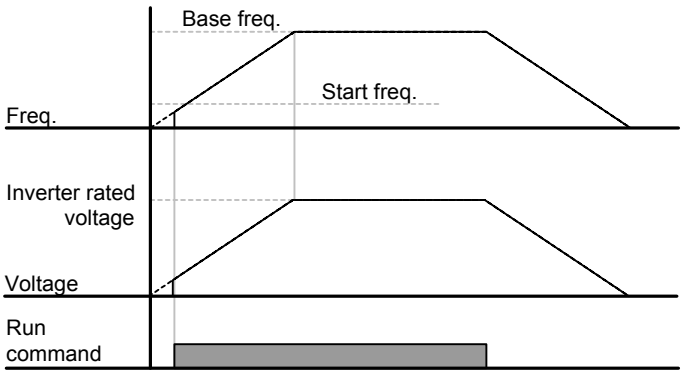


- Square V/F pattern

| Group | Code | Parameter Name | Setting | Range | Initial | Unit |
|---|---|---|---|---|---|---|
| Function group 1 | **F30** | **[V/F pattern]** | **1** | 0 ~ 2 | 0 | |

- Set F30 to 1{Square}.
- This pattern maintains squared volts/hertz ratio. Appropriate applications are fans, pumps, etc.

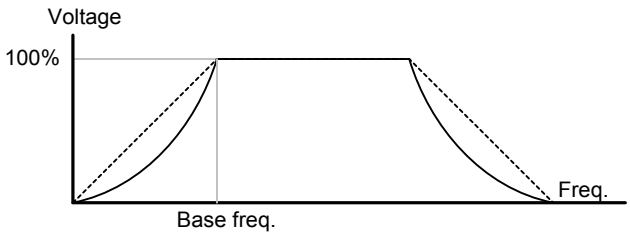

- User V/F pattern operation

| Group | Code | Parameter Name | Setting | Range | Initial | Unit |
|---|---|---|---|---|---|---|
| Function group 1 | **F30** | **[V/F pattern]** | **2** | 0 ~ 2 | 0 | |
| | F31 | [User V/F frequency 1] | - | 0 ~ 400 | 15.00 | Hz |
| | ~ | ~ | | | | |
| | F38 | [User V/F voltage 4] | - | 0 ~ 100 | 100 | % |

- Select F30 to 2 {User V/F}.
- User can adjust the Volt/Frequency ratio according to V/F pattern of specialized motors and load characteristics.

**⚠CAUTION**

In case of using a standard induction motor, if this value is set much higher than linear V/F pattern, it could result in torque shortage or motor overheating due to over-energizing.
When User V/F pattern is active, F28 - [Torque Boost in forward direction] and F29 - [Torque Boost in reverse direction] are deactivated.

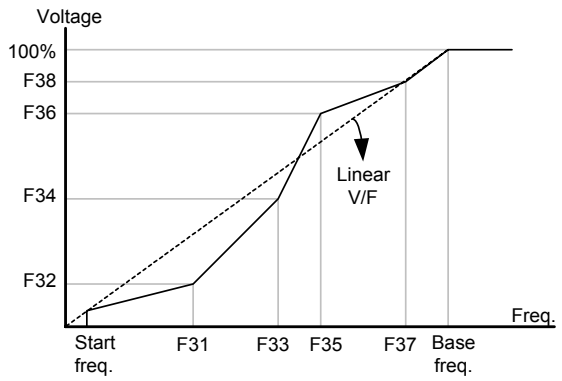


- Output voltage adjustment

| Group | Code | Parameter Name | Setting | Range | Initial | Unit |
|---|---|---|---|---|---|---|
| Function group 1 | **F39** | **[Output voltage adjustment]** | **-** | 40 ~ 110 | 100 | % |

- This function is used to adjust the output voltage of the inverter. This is useful when you use a motor that has a rated voltage lower than the input voltage.

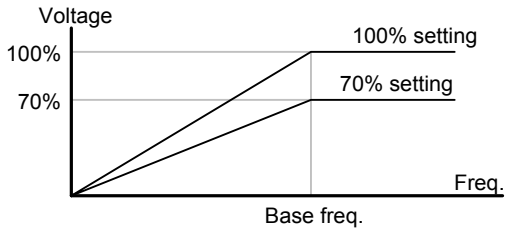

- Manual torque boost

| Group | Code | Parameter Name | Setting | Range | Initial | Unit |
|---|---|---|---|---|---|---|
| Function group 1 | **F27** | **[Torque Boost select]** | **0** | 0 ~ 1 | 0 | |
| | F28 | [Torque boost in forward direction] | - | 0 ~ 15 | 2 | % |
| | F29 | [Torque boost in reverse direction] | | | | |

- Set F27 to 0 {Manual torque boost}.
- The values of [Torque boost in forward/reverse direction] are set separately in F28 and F29.

**⚠ CAUTION**

- If the boost value is set much higher than required, it may cause motor overheating due to over-energizing.

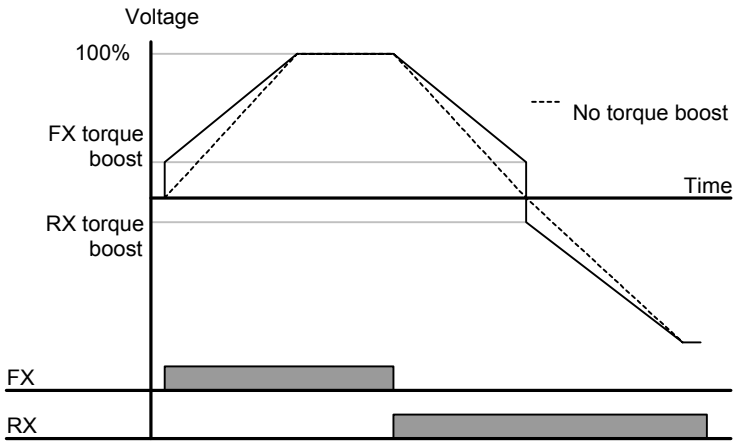


- Auto torque boost

| Group | Code | Parameter Name | Setting | Range | Initial | Unit |
|---|---|---|---|---|---|---|
| Function group 1 | **F27** | **[Torque Boost select]** | **1** | 0 ~ 1 | 0 | |
| Function group 2 | H34 | [No load motor Current] | - | 0.1 ~ 20 | - | A |
| | H41 | [Auto tuning] | 0 | 0 ~ 1 | 0 | |
| | H42 | [Stator resistance (Rs)] | - | 0 ~ 14 | - | Ω |

- Before Auto Torque Boost setting, H34 and H42 should be set correctly (See page 10-6, 10-10).
- Select 1{Auto torque boost} in F27.
- Inverter automatically calculates torque boost value using motor parameters and outputs the corresponding voltage.

## 7.6 Stop method select

- Decel to stop

| Group | Code | Parameter Name | Setting | Range | Initial | Unit |
|---|---|---|---|---|---|---|
| Function group 1 | **F4** | **[Stop mode select]** | **0** | 0 ~ 3 | 0 | |

- Select 0 {decel to stop} in F4 code.
- Motor decelerates to 0 Hz and stops during the setting time.

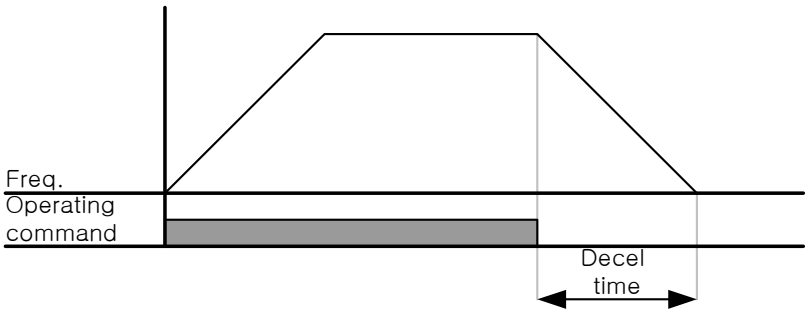


- DC braking to stop

| Group | Code | Parameter Name | Setting | Range | Initial | Unit |
|---|---|---|---|---|---|---|
| Function group 1 | **F4** | **[Stop mode select]** | **1** | 0 ~ 3 | 0 | |

- Select 1 {DC brake to stop} in F4 code.
- Refer to page 8-1.

- Free run stop

| Group | Code | Parameter Name | Setting | Range | Initial | Unit |
|---|---|---|---|---|---|---|
| Function group 1 | **F4** | **[Stop mode select]** | **2** | 0 ~ 3 | 0 | |

- Select 2 {Free run stop} in F4 code.
- When operating command is turned OFF, Output Frequency and voltage are shut down.

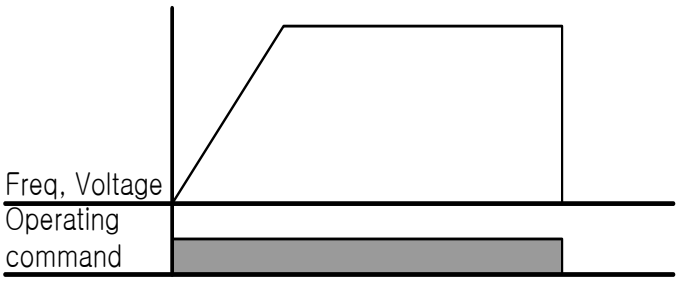

## 7.7 Frequency limit

- Frequency limit using Max Frequency and Start Frequency

| Group | Code | Parameter Name | Setting | Range | Initial | Unit |
|---|---|---|---|---|---|---|
| Function group 1 | **F21** | **[Max frequency]** | - | 0 ~ 400 | 60.00 | Hz |
| | **F23** | **[Start frequency]** | - | 0.1 ~ 10 | 0.50 | Hz |

- Max Frequency: Frequency highest limit. Any frequency cannot be set above [Max frequency] except for F22 [Base frequency].
- Start Frequency: Frequency lowest limit. If a frequency is set lower than this, 0.00 is automatically set.

- Frequency command limit using High/Low limit

| Group | Code | Parameter Name | Setting | Range | Initial | Unit |
|---|---|---|---|---|---|---|
| Function group 1 | **F24** | **[Frequency high/low limit select]** | **1** | 0 ~ 1 | 0 | |
| | F25 | [Frequency high limit] | - | 0 ~ 400 | 60.00 | Hz |
| | F26 | [Frequency low limit] | - | 0 ~ 400 | 0.50 | Hz |

- Set F24 to 1.
- Active run frequency can be set within the range of F25 and F26.

▸ When frequency setting is done via Analog input (voltage or current input), the inverter operates within the range of high and low limit frequency as shown below.

▸ This setting is also valid when frequency setting is done via keypad.

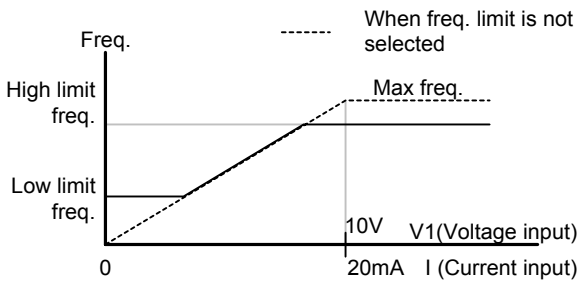

- Skip frequency

| Group | Code | Parameter Name | Setting | Range | Initial | Unit |
|---|---|---|---|---|---|---|
| Function group 2 | **H10** | **[Skip frequency select]** | **1** | 0 ~ 1 | 0 | |
| | H11 | [Skip frequency low limit 1] | - | 0.1 ~ 400 | 10.00 | Hz |
| | ~ | ~ | | | | |
| | H16 | [Skip frequency low limit 3] | - | 0.1 ~ 400 | 35.00 | Hz |

- Set H10 to 1.
- Run frequency setting is not available within the skip frequency range of H11-H16.
- Skip frequency is settable within the range of F21 – [Max frequency] and F23 – [Start frequency].

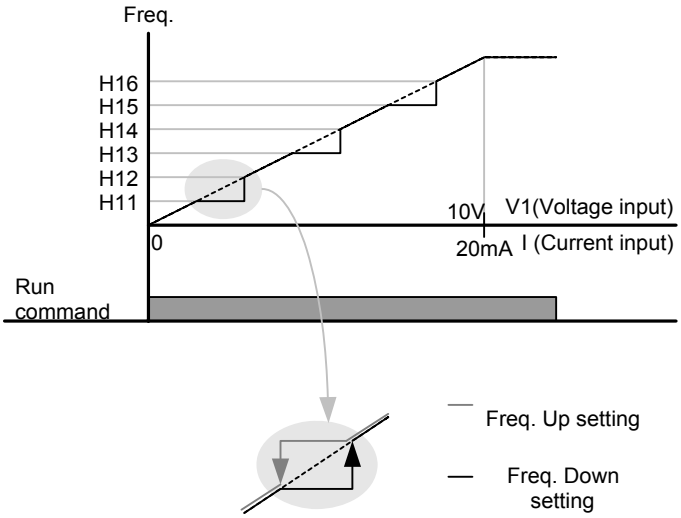


- When it is desired to avoid resonance attributable to the natural frequency of a mechanical system, these parameters allow resonant frequencies to be skipped. Three different areas of [Skip frequency High/Low limit] can be set with the skip frequencies set to either the top or bottom point of each area. However, during acceleration or deceleration, the run frequency within the set area is valid.

- In the case of increasing frequency setting as shown above, if frequency set value (Analog setting via voltage, current, or digital setting via keypad) is within the range of Skip frequency, it maintains Skip freq RS485 communication, frequency low limit value. If the set value is outside the range, it increases the frequency.

- In the case of decreasing frequency setting, if frequency set value (Analog setting via voltage, current, RS485 communication, or Digital setting via keypad) is within the range of Skip frequency, it maintains Skip frequency high limit value. If the set value is outside the range, it decreases the frequency.

# CHAPTER 8 - ADVANCED FUNCTIONS

## 8.1 DC brake

- Stopping motor by DC brake

| Group | Display | Parameter Name | Setting | Range | Default | Unit |
|---|---|---|---|---|---|---|
| Function group 1 | **F 4** | **[Stop mode select]** | **1** | 0 ~ 3 | 0 | |
| | F 8 | [DC Brake start frequency] | - | 0.1 ~ 60 | 5.00 | Hz |
| | F 9 | [DC Brake wait time] | - | 0 ~ 60 | 0.1 | sec |
| | F10 | [DC Brake voltage] | - | 0 ~ 200 | 50 | % |
| | F11 | [DC Brake time] | - | 0 ~ 60 | 1.0 | sec |

- Set F4 - [Stop mode select] to 1.
- F 8: The frequency at which the DC brake will become active.
- F 9: Inverter output will hold for this time after F8 - [DC Brake start frequency] before applying F10 - [DC Brake voltage].
- F10: Set this value as a percent of H33 – [Motor rated current].
- F11: It sets the time for F10 - [DC Brake voltage] to be applied to the motor after F 9 - [DC Brake wait time].

| ⚠CAUTION |
|---|
| If excessive DC Brake voltage is set or DC Brake time is set too long, it may cause motor overheating and damage to the motor. |

- Setting F10 or F11 to 0 will disable DC brake.
- F 9 – [DC Brake Wait time]: When load inertia is large or F 8 – [DC Brake Start Frequency] is high, over current trip may occur. It can be prevented using F9.

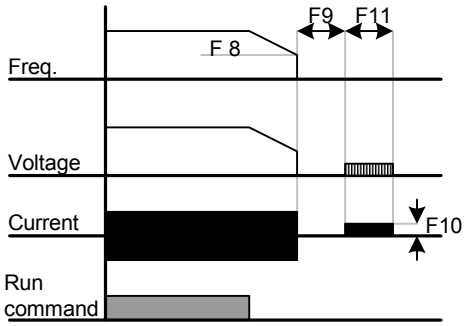


- In case of DC brake at high load inertia and frequency, change the DC brake controller gain according to H37 set value.

| | | | |
|---|---|---|---|
| H37 | Load inertia ratio | 0 | Less than 10 times motor inertia |
| | | 1 | 10 times motor inertia |
| | | 2 | Greater than 10 times motor inertia |

- Starting DC brake

| Group | Display | Parameter Name | Setting | Range | Default | Unit |
|---|---|---|---|---|---|---|
| Function group 1 | **F12** | **[DC Brake start voltage]** | **-** | 0 ~ 200 | 50 | % |
| | **F13** | **[DC Brake start time]** | **-** | 0 ~ 60 | 0 | sec |

- F12: It sets the level as a percent of H33 – [Motor rated current].
- F13: Motor accelerates after DC voltage is applied for the set time.

| ⚠CAUTION |
|---|
| If excessive DC Brake voltage is set or DC Brake time is set too long, it may cause motor overheating and damage to the motor. |

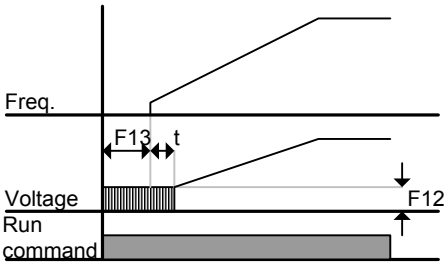


- Setting F12 or F13 to 0 will disable Starting DC brake.
- t: After F13 - [DC Brake start time], the frequency is increasing after DC voltage is applied until the time t.

- DC brake at a stop

| Group | Display | Parameter Name | Setting | Range | Default | Unit |
|---|---|---|---|---|---|---|
| Function group 1 | **F12** | **[DC Brake start voltage]** | **-** | 0 ~ 200 | 50 | % |
| I/O group | **I19** | **[Multi-function Input terminal P3 Function select]** | **11** | 0 ~ 25 | 2 | |

- F12: It sets the level as a percent of H33 – [Motor rated current].
- Select a terminal to issue a command of DC brake at a stop among P1 to P8.
- If P3 terminal is set for this function, set I19 to 11 {DC brake during stop}.

| ⚠CAUTION |
|---|
| If excessive DC Brake voltage is set or DC Brake time is set too long, it may cause motor overheating and damage to the motor. |

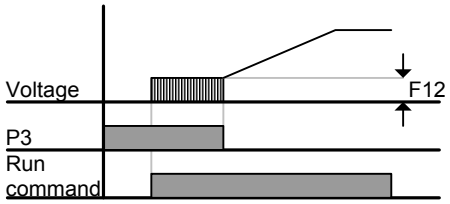

## 8.2 Jog operation

- Terminal jog operation

| Group | Display | Parameter Name | Setting | Range | Default | Unit |
|---|---|---|---|---|---|---|
| Function group 1 | **F20** | **[Jog frequency]** | **-** | 0 ~ 400 | 10.00 | Hz |
| I/O group | **I21** | **[Multi-function input terminal P5 define]** | **4** | 0 ~ 25 | 4 | |

- Set the desired jog frequency in F20.
- Select a terminal from P1 - P8 to use for this setting.
- If P5 is set for Jog operation, set I21 to 4 {Jog}.
- Jog frequency can be set within the range of F21 - [Max frequency] and F23 – [Start frequency].

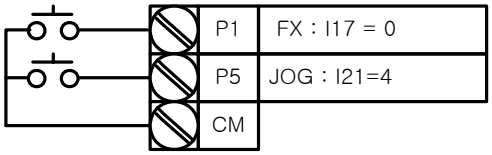


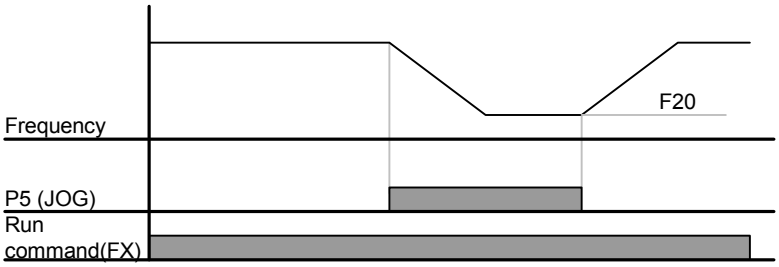


- Jog operation overrides all other operations except Dwell operation. Therefore, if Jog frequency command is entered in the middle of Multi-Step, Up-Down or 3-wire operation, operation is executed at Jog frequency.
- The above diagram is an example when Multi-function input is set to NPN mode.
- Terminal jog operation

- Terminal JOG FX/RX operation

| Group | Display | Parameter Name | Setting | Range | Default | Unit |
|---|---|---|---|---|---|---|
| Function group 1 | **F20** | **[Jog frequency]** | **-** | 0 ~ 400 | 10.00 | Hz |
| I/O group | **I23** | **[Multi-function input terminal P7 define]** | **26** | 0 ~ 27 | 6 | |
| | **I24** | **[Multi-function input terminal P8 define]** | **27** | 0!27 | 7 | |

- Set the desired jog frequency in F20.
- Select a terminal from P1 - P8 to use for this setting.
- If P7 is set for Jog operation, set I23 to 26 {Jog}.

- Jog frequency‘s setting range can be set between Max. frequency (F21) and start frequency (F23).
- The following diagram is an example when reference frequency is 30Hz and Jog frequency is 10 Hz.

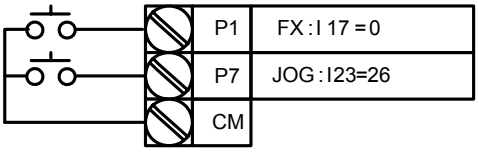


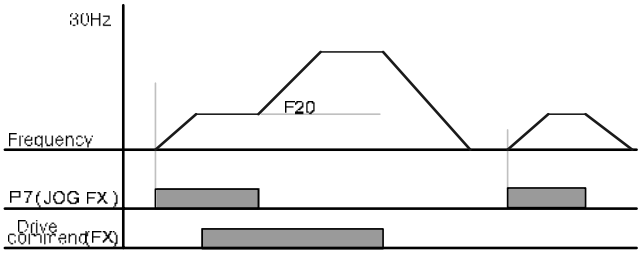


## 8.3 UP-DOWN Drive

- Up-down storage function

| Group | Display | Parameter Name | Setting | Range | Default | Unit |
|---|---|---|---|---|---|---|
| Drive group | **Frq** | **[Frequency setting method]** | **8** | 0~8 | 0 | |
| I/O group | **I17** | **[Multi-function input terminal P1 define]** | **0** | 0 ~ 27 | 0 | |
| | **I22** | **[Multi-function input terminal P6 define]** | **25** | | 5 | |
| | **I23** | **[Multi-function input terminal P7define]** | **15** | | 6 | |
| | **I24** | **[Multi-function input terminal P8define]** | **16** | | 7 | |
| Function group 1 | **F63** | **[Up-down frequency Save select]** | **-** | 0~1 | 0 | |
| | **F64** | **[Up-down frequency storage]** | **-** | | 0.00 | |

- Select 8 in Frq code of drive group
- Select the terminal which uses as a up-down drive among multi-function input (P1~P8)
- If you select P7 and P8 as an up-down drive terminal, select each 15 (frequency increase command) and 16 (frequency decrease command) in the I23 and I24 of I/O group.
- If you select P6 terminal as an up-own save initial terminal, select 25 (up-down save initialization) as above.
- Up/down Save function: If F63, 'Save up/down frequency', is set to 1, the frequency before the inverter was stopped or decelerated is saved in F64.

- While up-down save operates, the user can initialize the saved up-down frequency by setting multi-function input terminal as a up-down frequency save initialization.

| | | | |
|---|---|---|---|
| F63 | Save up/down frequency select | 0 | Remove 'save up/down frequency' |
| | | 1 | Set 'save up/down frequency' |
| F64 | Save up/down frequency | Up/down frequency saved | |

- If 'Up/Down Save Frequency Initialization' signal is input while the multi-function input 'Up' or 'Down' function is applied, this signal is ignored.

- Up-down mode select

| Group | Display | Parameter Name | Setting | Range | Default | Unit |
|---|---|---|---|---|---|---|
| Drive group | **Frq** | **[Frequency setting method]** | **8** | 0~8 | 0 | |
| I/O group | **I17** | **[Multi-function input terminal P1 define]** | **0** | 0 ~ 27 | 0 | |
| | **I23** | **[Multi-function input terminal P7define]** | **15** | | 6 | |
| | **I24** | **[Multi-function input terminal P8define]** | **16** | | 7 | |
| Function group 1 | **F65** | **[Up-down mode select]** | **-** | 0~2 | 0 | |
| | **F66** | **[Up-down step frequency]** | **-** | 0~400 | 0.00 | Hz |

- Select 8 in Frq code of drive group
- Select the terminal which uses as a up-down drive among multi-function input (P1~P8)
- Operates in selected mode as a step frequency set in F66.

- The up-down mode is Select as follows

| | | | |
|---|---|---|---|
| F65 | Up/down select | 0 | The reference frequency is increased according to base of Max./Min. frequency. (Initial value) |
| | | 1 | Increased as many as step frequency (F66) according to edge input |
| | | 2 | Combination of 0 and 1 |
| F66 | Step frequency | Frequency increased according to edge input | |

- When F65 is 0: If you press UP, it is increased up to Max. frequency as a speed set in the above. (If frequency limit exist, speed is increased up to upper limit.) If press DOWN, It is decreased as a speed set in the above regardless of stop method. (If frequency limit exist, speed is decreased up to lower limit.)

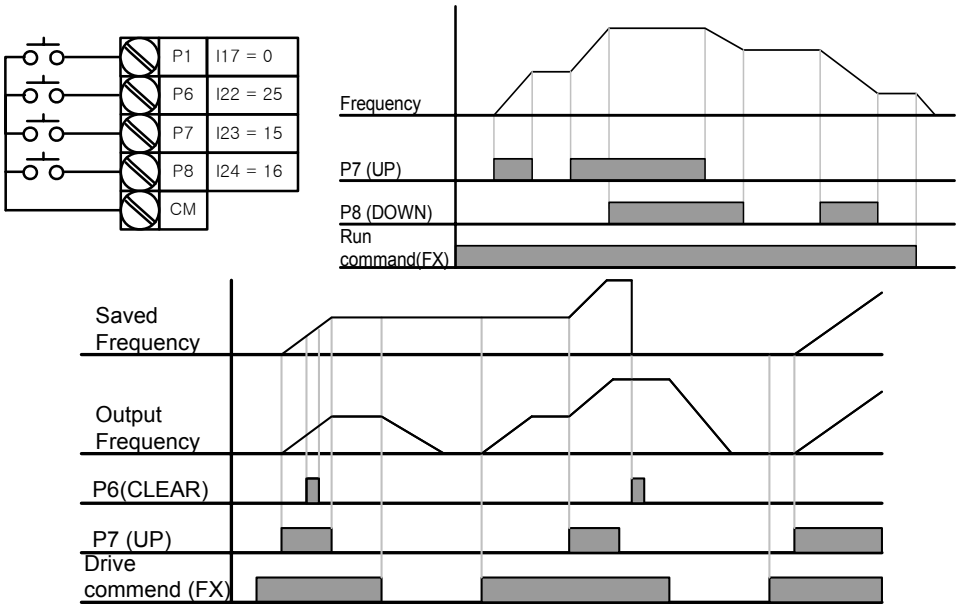

- When F65 is 1: It is increased as many as step frequency set as F66 at the rising edge of multi-function input set as UP and when up-down is defined, it saves frequency at the falling edge. It is decreased as many as step frequency set as F66 at the falling edge of rising edge of multi-function input set as DOWN and when up-down is defined, it saves frequency as the falling edge. In this case, while multi-function input set as UP or DOWN is defined, if stop command is inputted, previous falling edge value is saved and if multi-function input is not defined, present frequency is not saved. The accel/decel time is same with when stetted as “0”.
-

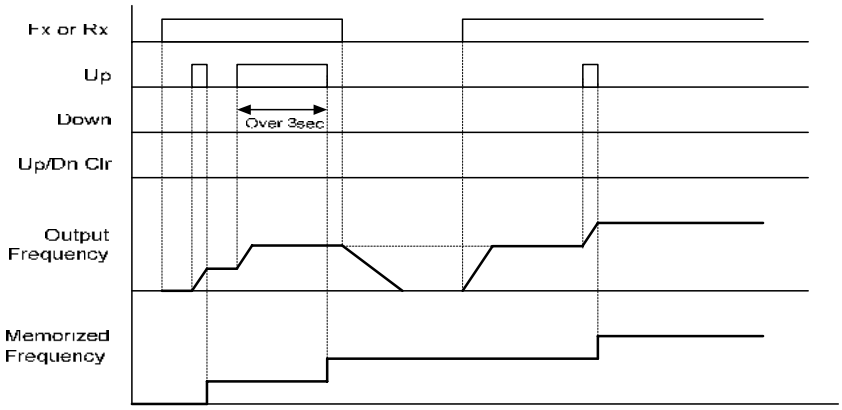


- When F65 is 2: It is increased as many as step frequency set as F66 at the rising edge of multi-function input set as UP and if it is activated for 3 second, it operates like something set as “0”. It is decreased as many as step frequency set as F66 at the rising edge of multi-function input set as DOWN and if it is activated for 3 second, it operates like something set as “0” and the accel/decel time is same with when stetted as “0”.

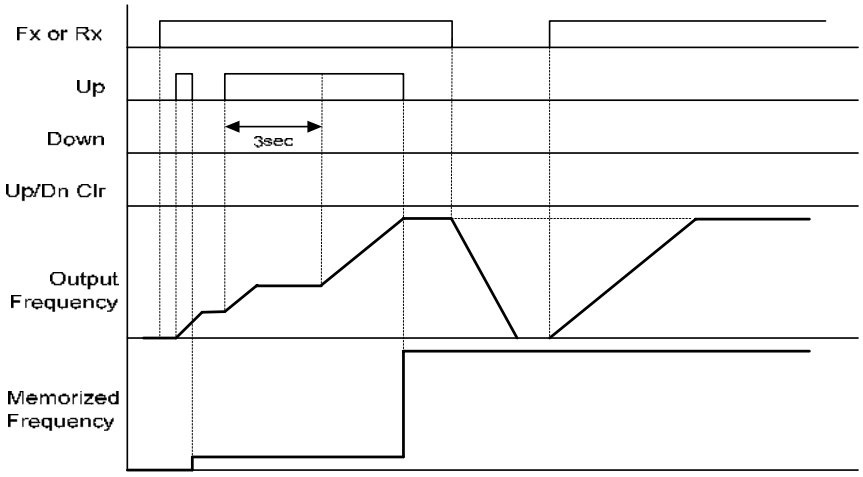


| ⚠CAUTION |
| --- |
| **Because of UP or DOWN, when the input is entered again before it is increased as many as 1 step frequency, the input is ignored and the saved frequency is also frequency of the inactivated moment** |

## 8.4 3-Wire

| Group | Display | Parameter Name | Setting | Range | Default | Unit |
|---|---|---|---|---|---|---|
| I/O group | I17 | [Multi-function Input terminal P1 select] | 0 | 0 ~ 27 | 0 | |
| | ~ | ~ | | | | |
| | **I24** | **[Multi-function Input terminal P8 select]** | **17** | | 7 | |

- Select the terminal from P1-P8 for use as 3-Wire operation.
- If P8 is selected, set I24 to 17 {3-Wire operation}.

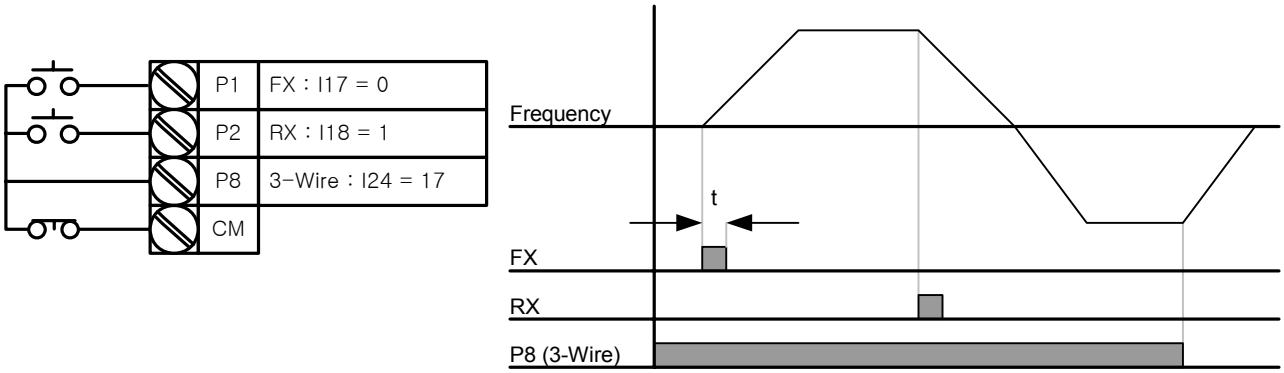


- Input signal is latched (saved) in 3-Wire operation. Therefore, inverter can be operated by Push-button switch.
- The bandwidth of pulse (t) should not be less than 50msec.

## 8.5 Dwell operation

| Group | Display | Parameter Name | Setting | Range | Default | Unit |
|---|---|---|---|---|---|---|
| Function group 2 | **H 7** | **[Dwell frequency]** | **-** | 0.1 ~ 400 | 5.00 | Hz |
| | **H 8** | **[Dwell time]** | **-** | 0 ~ 10 | 0.0 | sec |

- In this setting, motor begins to accelerate after dwell operation is executed for dwell time at the dwell frequency.
- It is mainly used to release mechanical brake in elevators after operating at dwell frequency.

- Dwell frequency: This function is used to output torque in an intended direction. It is useful in hoisting applications to get enough torque before releasing a mechanical brake. Rated Slip frequency is calculated by the formula shown below.

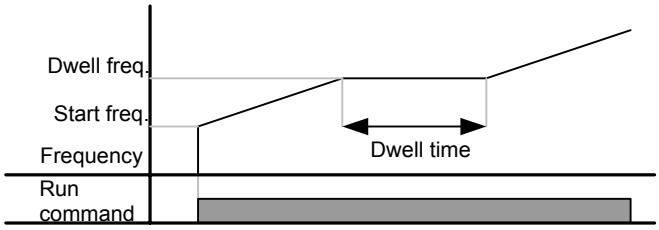


## 8.6 Slip compensation

| Group | Display | Parameter Name | Setting | Range | Default | Unit |
|---|---|---|---|---|---|---|
| Function group 2 | H30 | [Motor type select] | - | 0.2 ~ 7.5 | 7.5 | |
| | H31 | [Number of motor poles] | - | 2 ~ 12 | 4 | |
| | H32 | [Rated slip frequency] | - | 0 ~ 10 | 2.33 | Hz |
| | H33 | [Motor rated current] | - | 0.5 ~ 50 | 26.3 | A |
| | H34 | [Motor No Load Current] | - | 0.1 ~ 20 | 11.0 | A |
| | H36 | [Motor efficiency] | - | 50 ~ 100 | 87 | % |
| | H37 | [Load inertia rate] | - | 0 ~ 2 | 0 | |
| | **H40** | **[Control mode select]** | **1** | 0 ~ 3 | 0 | |

- Set H40 – [Control mode select] to 1 {Slip compensation}.
- This function enables the motor to run in constant speed by compensating inherent slip in an induction motor.

- H30: Set the motor type connected to the inverter output side.

| | | | |
|---|---|---|---|
| H30 | [Motor type select] | 0.2 | 0.2kW |
| | | ~ | |
| | | 22.0 | 22.0kW |

- H31: Enter the pole number on the Motor nameplate.
- H32: Enter the slip frequency in accordance with the following formula and motor nameplate.

$$f_s = f_r - \left(\frac{rpm \times P}{120}\right)$$

Where, $f_s$ = Rated slip frequency

$f_r$ = Rated frequency

$rpm$ = Motor rated RPM

$P$ = Motor pole number

Ex) Rated freq.: 60Hz, Rated RPM: 1740rpm, Poles: 4,

$$f_s = 60 - \left(\frac{1740 \times 4}{120}\right) = 2Hz$$

- H33: Enter the motor nameplate rated current.
- H34: Enter the measured current when the motor is running at rated frequency after the load is removed. Enter 50% of the rated motor current when it is difficult to measure the motor no load current.
- H36: Enter motor efficiency on the nameplate.
- H37: Select load inertia based on motor inertia as shown below.

| | | | |
|---|---|---|---|
| H37 | [Load inertia rate] | 0 | Less than 10 times motor inertia |
| | | 1 | About 10 times motor inertia |
| | | 2 | Greater than 10 times motor inertia |

- As the loads are heavier, the speed gap between rated RPM and synchronous speed is widening (see the figure below). This function compensates for this inherent slip.

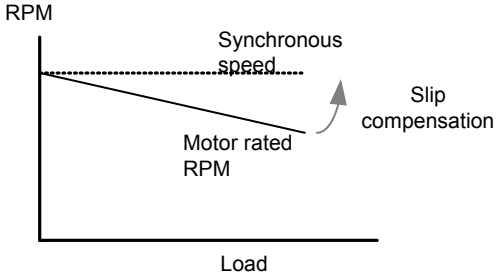


## 8.7 PID control

| Group | Display | Parameter Name | Setting | Range | Default | Unit |
|---|---|---|---|---|---|---|
| Function group 2 | **H49** | **[PID Operation select]** | **1** | 0 ~ 1 | 0 | - |
| | H50 | [PID Feedback select] | - | 0 ~ 1 | 0 | - |
| | H51 | [P gain for PID controller] | - | 0 ~ 999.9 | 300.0 | % |
| | H52 | [Integral time for PID controller (I gain)] | - | 0.1~ 32.0 | 1.0 | sec |
| | H53 | [Differential time for PID controller (D gain)] | - | 0.0~30.0 | 0 | sec |
| | H54 | [PID mode select] | - | 0 ~ 1 | 0 | - |
| | H55 | [PID output frequency high limit] | - | 0.1 ~ 400 | 60.0 | Hz |
| | H56 | [PID output frequency low limit] | - | 0.1 ~ 400 | 0.50 | Hz |
| | H57 | [PID reference select] | - | 0~4 | 0 | Hz |
| | H58 | [PID unit select] | - | 0~1 | 0 | - |
| | H61 | [Sleep delay time] | - | 0.0~2000.0 | 60.0 | - |
| | H62 | [Sleep frequency] | - | 0.00~400 | 0.00 | Hz |
| | H63 | [Wake-up level] | - | 0.0~100.0 | 35.0 | % |

| | | | | | | |
|---|---|---|---|---|---|---|
| I/O group | I17~ I24 | [Multi-function input terminal P1-P8 define] | 21 | 0 ~ 25 | - | - |
| Drive group | rEF | [PID reference] | - | 0~400 /0~100 | 0.00 /0.0 | Hz /% |
| | Fbk | [PID feedback] | - | 0~400 /0~100 | 0.00 /0.0 | Hz /% |

- In order to control the amount of following water, pressure and temperature, do PID control to inverter output frequency.
- Select H49 of function group 2 as a 1 (PID drive select). Then REF and FBK category show. Set PID reference value in REF and real PID feedback amount is monitored at the FBK
- PID drive is classified as two which are Normal PID mode and Process PID mode. It can be set in the H54 (PID mode select)

- H50: Select the feedback type of PID controller.

| | | | |
|---|---|---|---|
| H50 | [PID Feedback select] | 0 | Terminal I input (0 ~ 20[mA] ) |
| | | 1 | Terminal V1 input (0 ~ 10[V]) |

- H51: Set the percentage of output to error. If P Gain is set to 50%, 50% of the error value will be output. Higher value can reach the target control value faster but it may cause oscillation.
- H52: Set the time to output the accumulated error value. Set the time required to output 100% when the error value is 100%. If H52 - [Integral time for PID controller (I gain)] is set to 1 sec and the error becomes 100%, 100% will be output in 1 sec. Adjusting the value may reduce the nominal error. If the value is reduced, response will be faster but setting too low may lead to controller oscillation.
- H53: Set the output value to the variation of the error. The error is detected by 0.01 sec in SV-iG5A. If differential time is set to 0.01 sec and the percentage variation of error per 1 sec is 100%, 1% per 10msec is output.
- H54: PID Feed Forward Gain. Set the gain to add the target value to the PID controller output.
- H55, H56: It limits the output of the PID controller.
- H57: selects PID Reference
- H58: PID Reference and PID feedback's units are classified as two which is [Hz] and [%]. H58=0: [Hz], H58=1: [%]
- I17 ~ I24: To exchange PID to normal operation, set one of P1-P8 terminal to 21 and turn ON.
- rPM: Calculates the feedback from H50 into Motor frequency and displays it.
- rEF: indicates PID controller's command value.
- Fbk: converts feedback amount set in H50 to motor frequency.

- Normal PID drive (H54=0)

PID control diagram

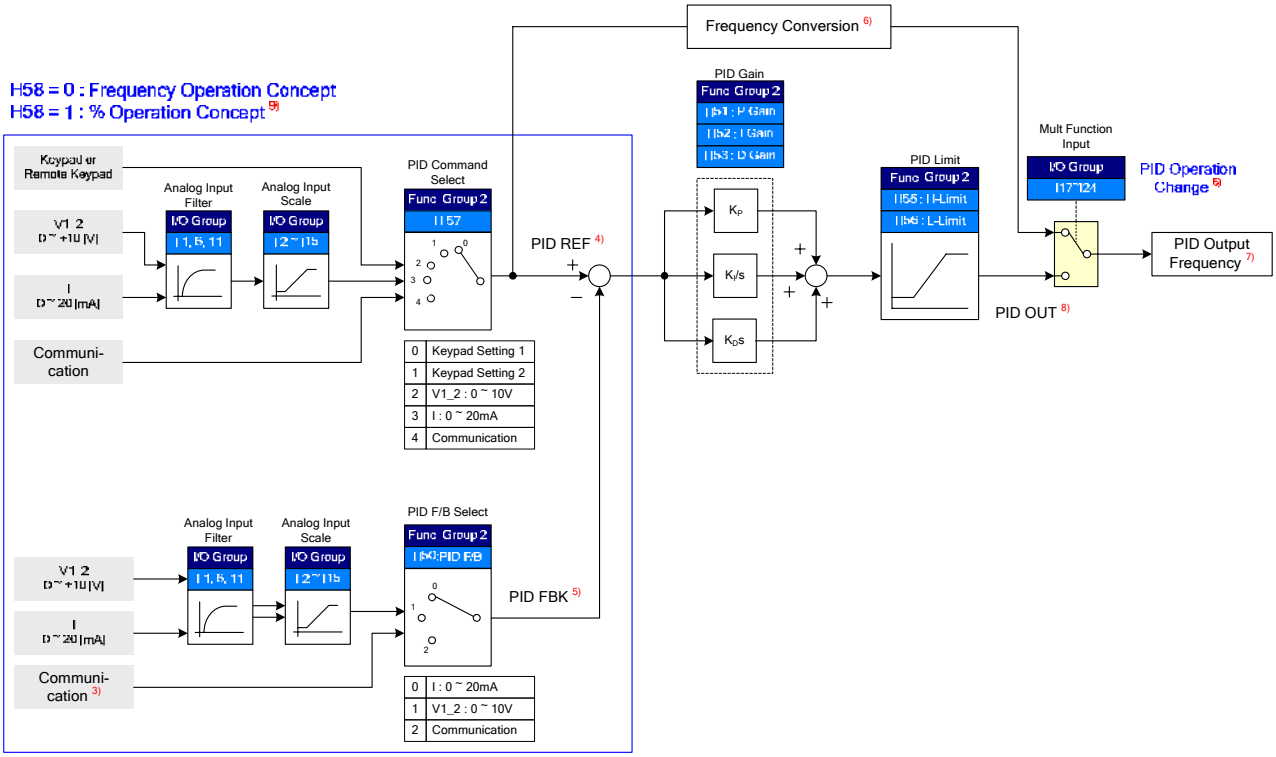


3) Adds RS-485 communications to PID Feedback category.

4) PID REF value can be changed and checked in the “rEF” of the DRV group.

Unit is [Hz] when H58=0 and [%] when H58=1

5) PID FBK value cab be checked in the “Fbk” of the DRV group

Unit is sane with the “rEF”

6) If PID switching is inputted to the multi-input (P1~P8), though H58 is 1, [%] is converted into [Hz].

7) Output frequency is displayed in the “SPD” of DRV group.

8) PID OUT of Normal PID is single polarity and it is limited by H55 (H-Limit) and H56 (L-Limit).

9) 100% is F21 (Max. frequency)

- Process PID drive (H52=1)

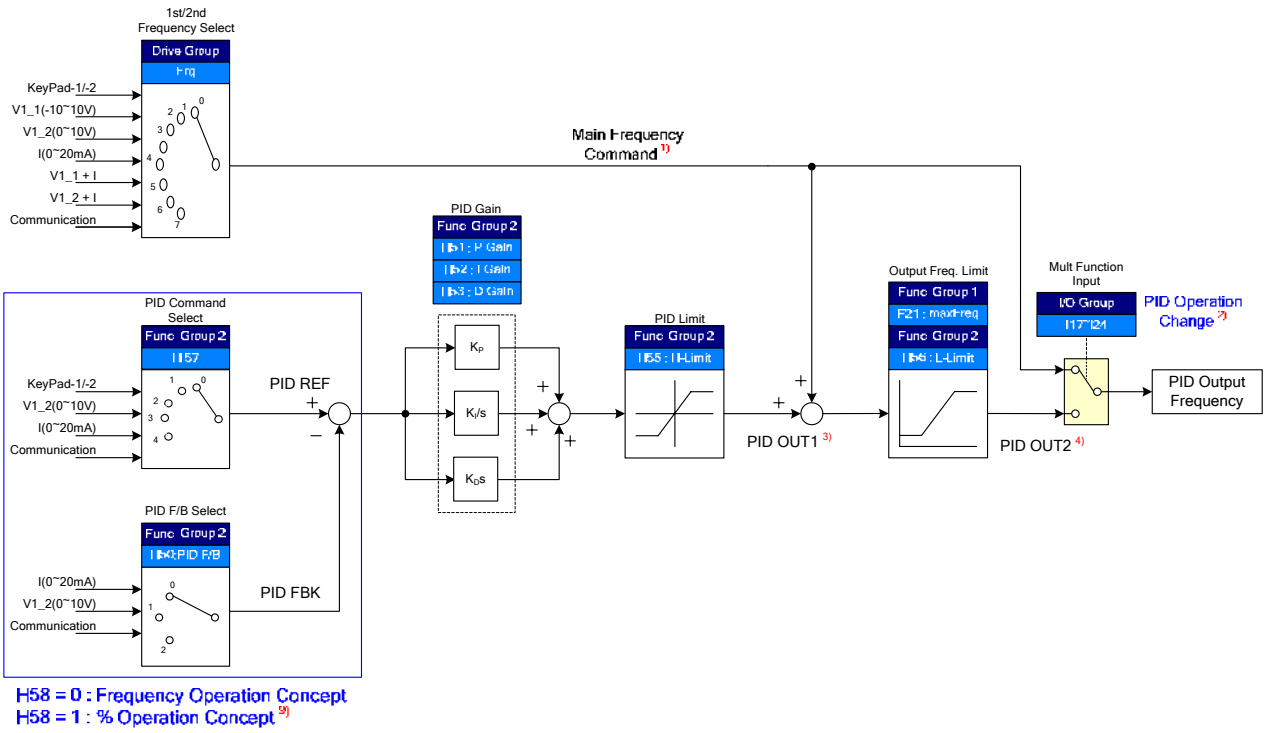


1) Speed command is the frequency (FRQ=8, except Up/Down) set by FRQ/FRQ2 and real output frequency is sum of speed command, PID OUT1 and PID OUT2.
2) If PID switching drive is selected,
3) PID OUT1's polarity is double. It is limited H55 (PID upper Limit).
4) Real output frequency PID OUT2 is limited by F21 (MaxFreq) and H56 (PID lower Limit)
Other operation is same with the Normal PID.

- Sleep & Wake-up
  - In the night for example, if output frequency of PID control is maintained over sleep delay time(H61) due to not enough flux, Sleep function becomes sleep mode automatically and inverter is stop. Under sleep mode, if error of PID Reference and Feedback is over H63(Wake-up Level), Sleep mode is released and the inverter restarts.
  - If stop command is input, Sleep mode is released

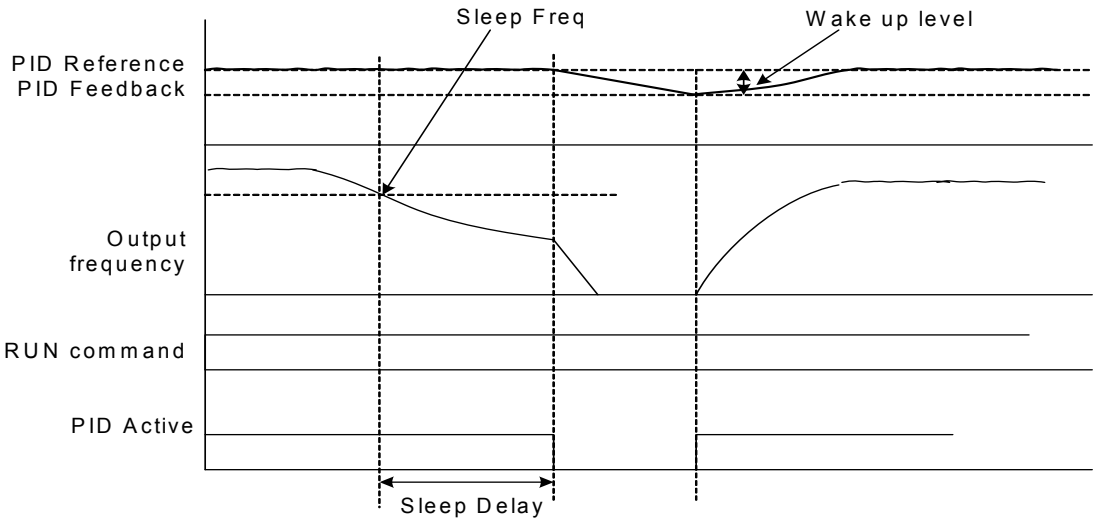


## 8.8 Auto-tuning

| Group | Display | Parameter Name | Setting | Range | Default | Unit |
|---|---|---|---|---|---|---|
| Function group 2 | **H41** | **[Auto tuning]** | **1** | 0 ~ 1 | 0 | - |
| | H42 | [Stator resistance (Rs)] | - | 0 ~ 28 | - | Ω |
| | H44 | [Leakage inductance (Lσ)] | - | 0 ~ 300.00 | - | mH |

- Automatic measuring of the motor parameters is provided.
- The measured motor parameters in H41 can be used in Auto Torque Boost and Sensorless Vector Control.

| ⚠CAUTION |
|---|
| Auto tuning should be executed after stopping the motor. Motor shaft must not run by the load during H41 – [Auto tuning]. |

- H41: When H41 is set to 1 and press the Enter (●) key, Auto tuning is activated and “TUn” will appear on the LED keypad. When finished, “H41” will be displayed.
- H42, H44: The values of motor stator resistance and leakage inductance detected in H41 are displayed, respectively. When Auto tuning is skipped or H93 – [Parameter initialize] is done, the default value corresponding to motor type (H30) will be displayed.
- Press the STOP/RST key on the keypad or turn on the EST terminal to stop the Auto Tuning.
- If Auto tuning of H42 and H44 is interrupted, the default value will be set. If H42 and H44 are finished and auto-tuning of leakage inductance is interrupted, the measured value of H42 and H44 are used and the default of leakage inductance is set.
- See page 8-16 for motor parameter default values.

| ⚠CAUTION |
|---|
| Do not enter any incorrect value as stator resistance and leakage inductance. Otherwise, the function of Sensorless vector control and Auto torque boost could be deteriorated. |

## 8.9 Sensorless Vector Control

| Group | Display | Parameter Name | Setting | Range | Default | Unit |
|---|---|---|---|---|---|---|
| Function group 2 | **H40** | **[Control mode select]** | **3** | 0 ~ 3 | 0 | - |
| | H30 | [Motor type select] | - | 0.2 ~ 22.0 | - | kW |
| | H32 | [Rated slip frequency] | - | 0 ~ 10 | - | Hz |
| | H33 | [Motor rated current] | - | 0.5 ~ 150 | - | A |
| | H34 | [Motor No Load Current] | - | 0.1 ~ 20 | - | A |
| | H42 | [Stator resistance (Rs)] | - | 0 ~ 28 | - | Ω |
| | H44 | [Leakage inductance (Lσ)] | - | 0~300.00 | - | mH |
| Function group 1 | F14 | [Time for energizing a motor] | - | 0.0~60.0 | 0.1 | sec |

- If H40 – [Control mode select] is set to 3, Sensorless vector control will become active.

| ⚠CAUTION |
|---|
| Motor parameters should be measured for high performance. It is highly recommended H41 – [Auto tuning] be done prior to proceeding operation via Sensorless vector control. |

- Ensure that the following parameters are entered correctly for high performance in Sensorless vector control.
- H30: Select motor type connected to inverter output.
- H32: Enter rated slip frequency based on motor nameplate RPM and rated frequency (See 8-8).
- H33: Enter motor nameplate rated current.
- H34: After removing the load, select H40 – [Control mode select] to 0 {V/F control} and run the motor at 60Hz. Enter the current displayed in Cur-[Output current] as motor no load current. If it is difficult to remove the load from the motor shaft, enter the value either 40 to 50% of the H33 – [Motor rated current] or the factory default.
- In case that occur torque riffle while high speed driving, lower H34-[No load current] to 30%.
- H42, H44: Enter the value of the parameter measured during H41 – [Auto tuning] or the factory default.
- F14: This parameter accelerates the motor after pre-exciting the motor for the set time. The amount of the pre-exciting current is set in H34- [Motor no load current].
- Directly enter the motor nameplate value except motor rating when 0.2kW is used.

■ Factory default by motor ratings

| Input voltage | Motor rating [kW] | Current rating [A] | No-load current [A] | Rated slip freq [Hz] | Stator resistance [Ω] | Leakage inductance [mH] |
|---|---|---|---|---|---|---|
| 200 | 0.2 | 1.1 | 0.6 | 2.33 | 14.0 | 122.00 |
| | 0.4 | 1.8 | 1.2 | 3.00 | 6.70 | 61.00 |
| | 0.75 | 3.5 | 2.1 | 2.33 | 2.46 | 28.14 |
| | 1.5 | 6.5 | 3.0 | 2.33 | 1.13 | 14.75 |
| | 2.2 | 8.8 | 4.4 | 2.00 | 0.869 | 11.31 |
| | 3.7 | 12.9 | 4.9 | 2.33 | 0.500 | 5.41 |
| | 5.5 | 19.7 | 6.6 | 2.33 | 0.314 | 3.60 |
| | 7.5 | 26.3 | 11.0 | 2.33 | 0.196 | 2.89 |
| | 11.0 | 37.0 | 12.5 | 1.33 | 0.120 | 2.47 |
| | 15.0 | 50.0 | 17.5 | 1.67 | 0.084 | 1.12 |
| | 18.5 | 62.0 | 19.4 | 1.33 | 0.068 | 0.82 |
| | 22.0 | 76.0 | 25.3 | 1.33 | 0.056 | 0.95 |
| 400 | 0.2 | 0.7 | 0.4 | 2.33 | 28.00 | 300.00 |
| | 0.4 | 1.1 | 0.7 | 3.0 | 14.0 | 177.86 |
| | 0.75 | 2.0 | 1.3 | 2.33 | 7.38 | 88.44 |
| | 1.5 | 3.7 | 2.1 | 2.33 | 3.39 | 44.31 |
| | 2.2 | 5.1 | 2.6 | 2.00 | 2.607 | 34.21 |
| | 3.7 | 6.5 | 3.3 | 2.33 | 1.500 | 16.23 |
| | 5.5 | 11.3 | 3.9 | 2.33 | 0.940 | 10.74 |
| | 7.5 | 15.2 | 5.7 | 2.33 | 0.520 | 8.80 |
| | 11.0 | 22.6 | 7.5 | 1.33 | 0.360 | 7.67 |
| | 15.0 | 25.2 | 10.1 | 1.67 | 0.250 | 3.38 |
| | 18.5 | 33.0 | 11.6 | 1.33 | 0.168 | 2.46 |
| | 22.0 | 41.0 | 13.6 | 1.33 | 0.168 | 2.84 |

## 8.10 Energy-saving operation

| Group | Display | Parameter Name | Setting | Range | Default | Unit |
|---|---|---|---|---|---|---|
| Function group 1 | **F40** | **[Energy-saving operation]** | **-** | 0 ~ 30 | 0 | % |

- Set the amount of output voltage to be reduced in F40.
- Set as the percent of Max output voltage.
- For fan or pump applications, energy consumption can be dramatically reduced by decreasing the output voltage when light or no load is connected.

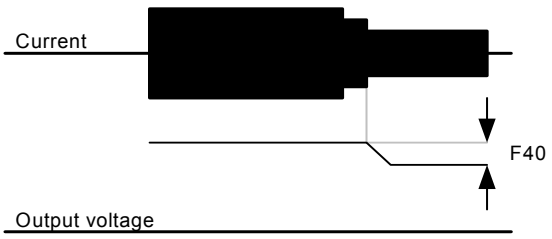

## 8.11 Speed search

| Group | Display | Parameter Name | Setting | Range | Default | Unit |
|---|---|---|---|---|---|---|
| Function group 2 | **H22** | **[Speed search select]** | **-** | 0 ~ 15 | 0 | |
| | H23 | [Current level] | - | 80 ~ 200 | 100 | % |
| | H24 | [Speed search P gain] | - | 0 ~ 9999 | 100 | |
| | H25 | [Speed search I gain] | - | | 200 | |
| I/O group | I54 | [Multi-function output terminal select] | 15 | 0 ~ 18 | 12 | |
| | I55 | [Multi-function relay select] | 15 | | 17 | |

- This is used to prevent possible fault from occurring if the inverter outputs the voltage during operation after the load is removed.
- The inverter estimates the motor rpm based on output current. Therefore, detecting exact speed is difficult.

The following table shows 4 types of Speed search selection.

| H22 | | Speed search during H20 – [Power ON start] | Speed search during Instant Power Failure restart | Speed search during H21- [Restart after fault reset] | Speed search during Acceleration |
|---|---|---|---|---|---|
| | | Bit 3 | Bit 2 | Bit 1 | Bit 0 |
| | 0 | - | - | - | - |
| | 1 | - | - | - | ✓ |
| | 2 | - | - | ✓ | - |
| | 3 | - | - | ✓ | ✓ |
| | 4 | - | ✓ | - | - |
| | 5 | - | ✓ | - | ✓ |
| | 6 | - | ✓ | ✓ | - |
| | 7 | - | ✓ | ✓ | ✓ |
| | 8 | ✓ | - | - | - |
| | 9 | ✓ | - | - | ✓ |
| | 10 | ✓ | - | ✓ | - |
| | 11 | ✓ | - | ✓ | ✓ |
| | 12 | ✓ | ✓ | - | - |
| | 13 | ✓ | ✓ | - | ✓ |
| | 14 | ✓ | ✓ | ✓ | - |
| | 15 | ✓ | ✓ | ✓ | ✓ |

- H23: Limits current during Speed search. Set as the percent of H33.
- H24, H25: Speed search is activated via PI control. Adjust P gain and I gain corresponding to the load characteristics.
- 
- I54, I55: Signal of active Speed search is given to external sequence via Multi-function output

terminal (MO) and Multi-function relay output (3ABC).

- EX) Speed search during Instant Power Failure restart

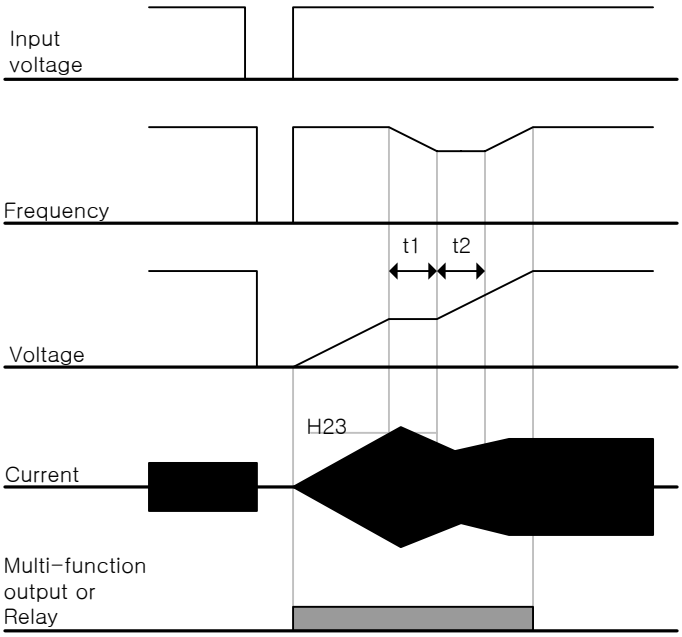


- When the input power is cut off due to instant power failure, the inverter outputs Low voltage trip (LV) to hold the output.
- When the power is restored, the inverter outputs the frequency before the low voltage trip and the voltage is increased due to PI control.
- t1: If current is increasing over the preset level in H23, the rise in voltage will stop and the frequency is decreased.
- t2: If the opposite of t1 occurs, the increase in voltage starts again and the decrease in frequency stops.
- When the frequency and voltage are restored back to the nominal level, acceleration will continue at the frequency before trip.

- Speed search operation is suitable for loads with high inertia. Stop the motor and restart when friction in load is high.
- SV-iG5A keeps normal operation when instant power failure occurs and power is restored in 15msec for the use of its inverter rating.
- Inverter DC link voltage can vary depending on output load quantity. Therefore, Low Voltage trip may occur when instant power failure is maintained over 15msec or output is higher than its rating.
- Instant power failure specification is applied when input voltage to Inverter is 200~230V AC for 200V class, or 380~480V AC for 400V class.

## 8.12 Auto restart try

| Group | Display | Parameter Name | Setting | Range | Default | Unit |
|---|---|---|---|---|---|---|
| Function group 2 | **H26** | **[Number of Auto Restart try]** | **-** | 0 ~ 10 | 0 | |
| | H27 | [Auto Restart time] | - | 0 ~ 60 | 1.0 | sec |

- This parameter sets the number of times auto restart is activated in H26.
- It is used to prevent the system down caused by internal protection function activated by the causes such as noise.

- H26: Auto restart will become active after the H27. H26 – [Number of Auto restart try] is reduced by 1 when it is active. If the trip outnumbers the preset restart try, auto restart function is deactivated. If the setting is reset via the control terminal or the STOP/RST key on the keypad, the number of auto restart try set by user is automatically entered.
- If there is no more trip occurring for 30 sec after Auto restart operation, the H26 is restored to the preset value.
- When operation is stopped due to Low voltage {Lvt} or Emergency stop {EST}, Inverter Overheat {Oht}, and Hardware Trip {HWt}, Auto restart will be deactivated.
- After the H27- [Auto Restart time], the motor starts acceleration automatically via speed search (H22-25).
- The following pattern is shown when the H26 – [Number of auto restart try] is set to 2.

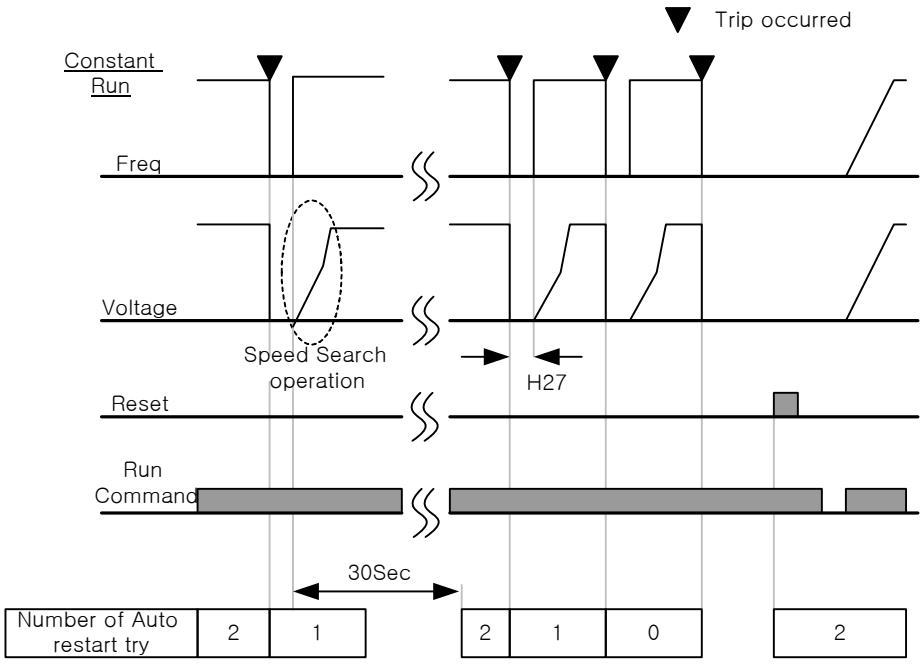

## 8.13 Operating sound select (Carrier frequency change)

| Group | Display | Parameter Name | Setting | Range | Default | Unit |
|---|---|---|---|---|---|---|
| Function group 2 | **H39** | **[Carrier frequency]** | **-** | 1 ~ 15 | 3 | kHz |

- This parameter affects the sound of the inverter during operation.

| | | |
|---|---|---|
| H39 | When setting carrier frequency high, | Motor sound reduced |
| | | Inverter heat loss increased |
| | | Inverter noise increased |
| | | Inverter leakage current increased |

## 8.14 2nd motor operation

| Group | Display | Parameter Name | Setting | Range | Default | Unit |
|---|---|---|---|---|---|---|
| Function group 2 | H81 | [2nd motor accel time] | - | 0 ~ 6000 | 5.0 | sec |
| | H82 | [2nd motor decel time] | - | 0 ~ 6000 | 10.0 | sec |
| | H83 | [2nd motor base freq.] | - | 30 ~ 400 | 60.00 | Hz |
| | H84 | [2nd motor V/F pattern] | - | 0 ~ 2 | 0 | |
| | H85 | [2nd motor Positive torque boost] | - | 0 ~ 15 | 5 | % |
| | H86 | [2nd motor Negative torque boost] | - | 0 ~ 15 | 5 | % |
| | H87 | [2nd motor stall prevention level] | - | 30 ~ 150 | 150 | % |
| | H88 | [2nd motor electronic thermal level for 1 min] | - | 50 ~ 200 | 150 | % |
| | H89 | [2nd motor electronic thermal level for continuous operation] | - | 50 ~ 150 | 100 | % |
| | H90 | [2nd motor rated current] | - | 0.1~100 | 26.3 | A |
| I/O group | I17 | [Multi-function Input terminal P1Function select] | - | 0 ~ 27 | 0 | |
| | ~ | ~ | | | | |
| | **I24** | **[Multi-function Input terminal P8Function select]** | **12** | | 7 | |

- **<u>Set the terminal among Multi-function input P1 thru P5 for second motor operation.</u>**
- To define the terminal P5 as second motor operation, set I24 to 12.

- Used when an inverter operates 2 motors connected to two different types of the loads.
- 2nd motor operation does not drive 2 motors at the same time.
- As the figure below, when using two motors with an inverter by exchanging them, select one motor from 2 motors connected. When 1st selected motor operation is stopped, select a terminal for 2nd motor and define H81-H90 parameters to drive the 2nd motor.
- Define the 2nd motor select when a motor is stopped.
- H81 ~ H90 parameters function the same as 1st motor.

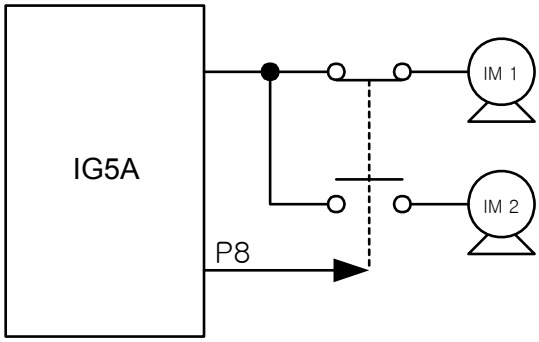

## 8.15 Self-Diagnostic function

- How to use Self-Diagnostic function

| Group | Display | Parameter Name | Setting | Range | Default | Unit |
|---|---|---|---|---|---|---|
| Function group 2 | **H60** | **Self-Diagnostic Selection** | **-** | 0 ~ 3 | 0 | - |
| I/O group | I17 | Multi-function input terminal P1 selection | - | 0 ~ 25 | 0 | - |
| | ~ | ~ | | | | |
| | I24 | Multi-function input terminal P8 selection | 20 | | 7 | - |

- Select Self-Diagnostic function in H60, Function group 2.
- Define one terminal among P1~P8 terminals for this function.
- To define P8 for this function, set I24 to “20”.

| ⚠ CAUTION |
|---|
| Take caution not to touch the inverter by hand or other objects while performing this function because current is flowing to the inverter output. |

- Perform Self-diagnostic function after input/output wiring of the inverter is finished.
- This function enables the user to safely check for the IGBT fault, output phase open and short, and Ground fault without disconnecting the inverter wiring.
- There are 4 ways to select.

| | | | |
|---|---|---|---|
| H60[1)] | Self-Diagnostic function | 0 | Self-Diagnostic disabled |
| | | 1 | IGBT fault and Ground fault [2)] |
| | | 2 | Output phase short & open circuit and Ground fault |
| | | 3 | Ground fault (IGBT fault, Output phase short and open circuit) |

1) Selecting the higher number performs the lower number’s function.

2) Ground fault of U phase in 2.2KW ~ 4.0KW inverters and ground fault of V phase in other rating inverters may not be detected when selecting “1”. Select 3 to make sure to detect all phase of U, V, W.

- When setting H60 to a specific value from 1 to 3 and turn the terminal defined for this function among P1 ~ P8 terminals ON, the corresponding function is conducted, displaying “dIAG” and the previous menu will be displayed when this function is completed.
- To stop this function, press STOP/RESET key on the keypad, turn the defined terminal OFF or turn the EST terminal ON.
- When error occurs during this function, “FLtL” will be displayed. While this message is displayed, press Enter key (■), the fault type is displayed and pressing the UP(▲) or Down(▼) key shows When the fault occurs while this function is being performed, press Stop/Reset key or turn the RESET-defined terminal ON to reset the fault.

- The following table shows the fault type while this function is active.

| No. | Display | Fault type | Diagnosis |
|---|---|---|---|
| 1 | **UPHF** | Switch above IGBT's U phase fault | Contact LSIS sales representatives. |
| 2 | **UPLF** | Switch below IGBT's U phase fault | |
| 3 | **vPHF** | Switch above IGBT's V phase fault | |
| 4 | **vPLF** | Switch below IGBT's V phase fault | |
| 5 | **WPHF** | Switch above IGBT's W phase fault | |
| 6 | **WPLF** | Switch below IGBT's U phase fault | |
| 7 | **UWSF** | Output short between U and W | Check for the short of inverter output terminal, motor connection terminal or the proper motor connection. |
| 8 | **vUSF** | Output short between U and V | |
| 9 | **WvSF** | Output short between V and W | |
| 10 | **UPGF** | Ground fault at U phase | Check for the ground fault occurred at inverter output cable or motor or motor insulation damage. |
| 11 | **vPGF** | Ground fault at V phase | |
| 12 | **WPGF** | Ground fault at W phase | |
| 13 | **UPOF** | Output open at U phase | Check for proper connection of the motor to the inverter output or proper motor connection. |
| 14 | **vPOF** | Output open at V phase | |
| 15 | **WPOF** | Output open at W phase | |

## 8.16 Frequency setting and 2nd drive method select

| Group | Display | Parameter Name | Setting | Range | Default | Unit |
|---|---|---|---|---|---|---|
| Drive group | **drv** | **Drive mode 1** | **-** | **0 ~ 3** | **1** | **-** |
| | **Frq** | **Frequency mode 1** | **-** | **0 ~ 8** | **0** | **-** |
| | **drv2** | **Drive mode 2** | **-** | **0 ~ 3** | **1** | |
| | **Frq2** | **Frequency mode 2** | **-** | **0 ~ 7** | **0** | |
| I/O group | **I17~I24** | **Multi-function input terminal P1 select** | - | **0 ~ 27** | | |

- Drive mode 1 is used when the input set as 2nd source is not entered into multi-input (I17~I24)
- Drive mode 2 can input frequency setting and drive command as a 2nd setting value by using multi-input terminal. In case of driving away from inverter by communication, it is used when quit the communication and operate by inverter.
- The switching method for Drive mode 1 and Drive mode 2 is as follows
- If multi-input terminal set as Drive mode 2 is off, it used as Drive mode 1. If multi-input terminal set as Drive mode 2 is on, it used as Drive mode2.

- 
- Selects the self drive in the 2nd switching of drv2 among the followings

| | | | | |
|---|---|---|---|---|
| drv2 | Drive mode 2 | 0 | Operation via Run/Stop key on the Keypad | |
| | | 1 | Terminal operation | FX: Forward Run command |
| | | | | RX: Reverse Run command |
| | | 2 | | FX: Run/Stop command |
| | | | | RX: Forward/Reverse command |
| | | 3 | Operation via communication | |

- Selects the self drive in the 2nd switching of Frq2 among the followings

| | | | | |
|---|---|---|---|---|
| Frq2 | Frequency mode 2 | 0 | Digital | Keypad digital frequency mode1 |
| | | 1 | | Keypad digital frequency mode2 |
| | | 2 | Analog | V1 terminal setting1: -10 ~ +10V |
| | | 3 | | V1 terminal setting2: 0 ~ +10V |
| | | 4 | | I terminal: 0 ~ 20mA |
| | | 5 | | V1 terminal setting1 + I terminal |
| | | 6 | | V1 terminal setting2 + I terminal |
| | | 7 | Setting via RS-485 communication | |

- The following is example for switching of drv1 and drv2.

| Group | Display | Parameter Name | Setting | Range | Default | Unit |
|---|---|---|---|---|---|---|
| Drive group | **drv** | **Drive mode 1** | **-** | **0 ~ 3** | **1** | **-** |
| | **Frq** | **Frequency mode 1** | **-** | **0 ~ 8** | **0** | **-** |
| | **drv2** | **Drive mode 2** | **-** | **0 ~ 3** | **1** | |
| | **Frq2** | **Frequency mode 2** | **-** | **0 ~ 7** | **0** | |
| I/O group | **I24** | **Multi-function input terminal P8 input terminal** | - | **0 ~ 27** | 7 | |

- The following figure is drawn when setting is like the above and command frequency is 30 [Hz], F4 [stop method]=0

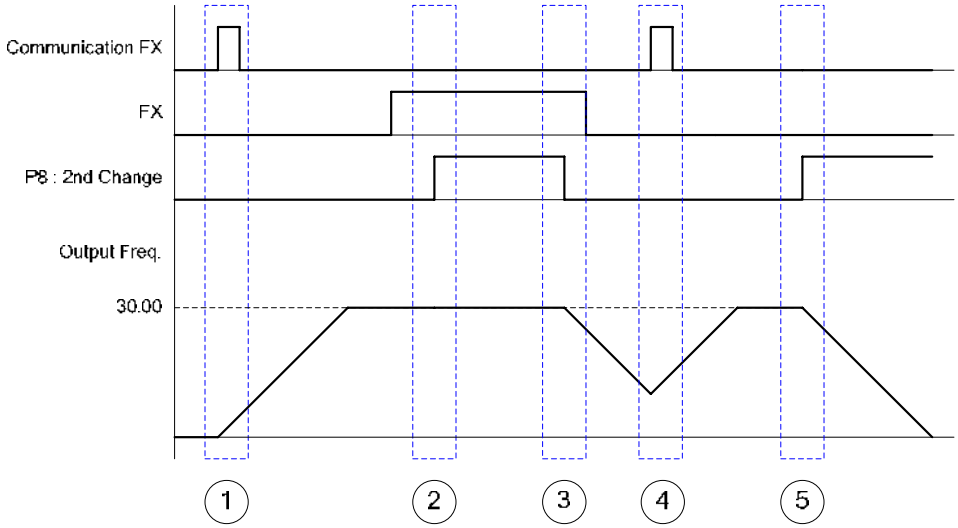


① Accelerate for accel time up to setting frequency by Drive 1 mode, FX signal.

② Drive continuously under FX is ON because DRV2 is 1 when P8 terminal input is ON and change into 2nd.

③ Stop gradually as stop command because DRV is communication drive when P8 terminal input is OFF and change into 1st.

④ Accelerate up to setting frequency for Drive 1 mode, FX signal is ON.

⑤ Stop gradually under FX is OFF because DRV2 is 1 when P8 terminal input is ON and change into 2nd.

| ⚠CAUTION |
|---|
| **If you press ON while multi-function input terminal (P1 ~ P8) is set to 2nd Source, frequency command and drive command is changed to Drive mode 2. So you should check Drive mode 2 before input multi-function terminal.** |

## 8.17 Over voltage trip prevention deceleration and Power Braking

| Group | Display | Parameter Name | Setting | Range | Default | Unit |
|---|---|---|---|---|---|---|
| Function group 1 | F 4 | Select stop method | 3 | 0 ~ 3 | 0 | |
| | F 59 | BIT 0: stall prevention under Accel<br>BIT 1: stall prevention under constant speed<br>BIT 2: stall prevention under Decel | - | 0 ~ 7 | 0 | |
| | F 61 | Select voltage limit under Decel | - | 0 ~ 1 | 0 | |

- To prevent overvoltage trip when reducing speed, set BIT2 of F59 to 1 and set 3 of F4 for Power Braking.

- Overvoltage trip prevention when reducing speed: a function preventing overvoltage trip when reducing speed or at stop by using the regeneration braking power.
- Power Braking : Adjusting the deceleration slope or accelerate again, when inverter's DC voltage rises above a certain level by the electric motor's regeneration energy. It can be used when short deceleration time without braking resistance is needed. However, be aware that the deceleration time can get longer than the set one and when it's used at a load that frequently decelerates, be cautious of damage caused by the motor's over heating.

**⚠ Caution**

**Stall prevention and Power Braking only operate when decelerating, and Power Braking has the precedence. That is, when BIT2 of F59 and Power Braking of F4 are both set, Power Braking operates.**
**F61(selecting voltage restriction when decelerating) is visible when BIT2 of F59 is set.**
**Overvoltage trip may occur, if the deceleration time is too short or the inertia too big.**

## 8.18 External brake control

| Group | Code | Name | Set nr. | Limit | Default | Unit |
|---|---|---|---|---|---|---|
| Function Group 2 | H 40 | Controlling method select | 0 | 0~3 | 0 | |
| In/Output Group | I 82 | Brake open current | - | 0~180.0 | 50.0 | % |
| | I 83 | Brake open delay time | - | 0~10.00 | 1.00 | Sec. |
| | I 84 | Brake open CW Freq. | - | 0~400 | 1.00 | Hz |
| | I 85 | Brake open CCW Freq. | - | 0~400 | 1.00 | Hz |
| | I 86 | Brake close delay time | - | 0~10.00 | 1.00 | Sec. |
| | I 87 | Brake close Freq. | - | 0~400 | 2.00 | Hz |
| | I 54 | Multi-function output terminal select | 19 | 0~ 19 | 12 | |
| | I 55 | Multi-function relay select | 19 | 0~ 19 | 17 | |

- I82~87 is visible only when I 54 or I 55 is set to 19.

- Used to control on, off operation of electronic brake of a load system. It only operates when set value of control mode(H 40) is 0 (V/F control). Build sequence after checking set control mode.
- When brake control is in operation, DC brake and dwell run do not operate when starting up.

- Brake open Sequence

- When the electric motor is given instructions to run, the inverter accelerates CW or CCW to the brake open frequency (I 84, I 85). After reaching the brake open frequency, the current running through the motor reaches brake open current(I82) and puts out brake open signals to multi-function output terminals or output relays that are set for brake control.

- Brake close sequence

- During run, the electric motor decelerates when stop instruction is given. When output frequency reaches brake close frequency, it stops decelerating and puts out brake close signal to the set output terminal. Frequency turns “0” after keeping the frequency for brake close delay time(I86).

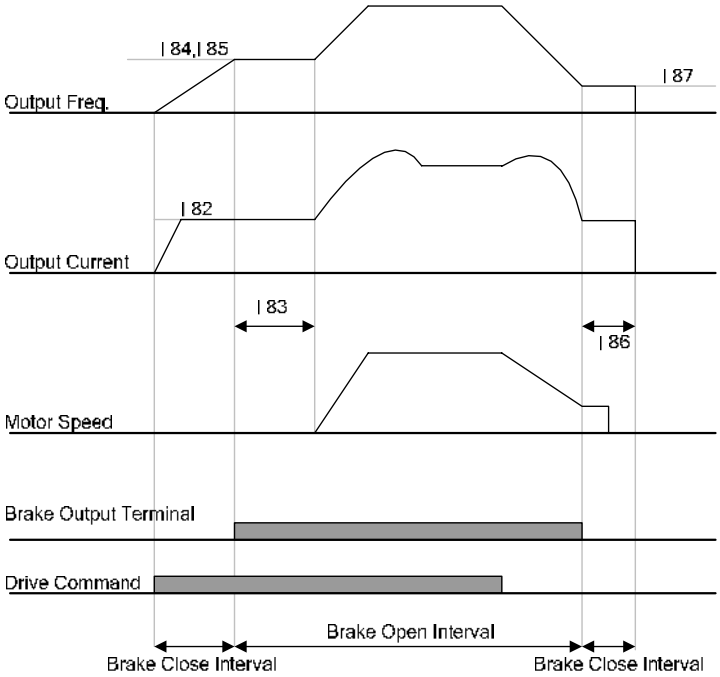


In Case of V/F Constant Control on Control Mode Select

| ⚠ Caution |
| --- |
| External Brake control is only used in V/F uniform control, and the brake open frequency has to be set smaller than close frequency. |

## 8.19 Kinetic energy buffering

| Group | Display | Parameter Name | Setting | Range | Default | Unit |
|---|---|---|---|---|---|---|
| Function Group 2 | H64 | KEB operation select | 1 | 0~1 | 0 | |
| | H65 | KEB operation start level | - | 110.0 ~ 140.0 | 130.0 | - |
| | H66 | KEB operation stop level | - | 110.0 ~ 145.0 | 135.0 | % |
| | H67 | KEB operation gain | - | 1 ~ 20000 | 1000 | - |
| | H37 | Load inertia | 0 | 0~2 | 0 | - |

- When power failure occurs in the input power, DC link voltage of the inverter gets low and low voltage defect occurs resulting a cut of the output. Its function is to maintain the voltage of DC link by controlling output frequency of the inverter during the time of power failure. That is, it can keep the time from the point of power failure to low voltage defect long.
- Selects energy buffering operation when input power is cut. If H64 is set to 0, it operates normal deceleration run until low voltage occurs. When H64 is set to 1, it controls the inverter output frequency and charges the energy occurred from the motor to the inverter DC.
- H 65(KEB operation start level), H 66(KEB operation stop level) : Selects starting and stopping point of the energy buffering operation. Set the stop level(H65) higher than the start level(H 66) setting the low voltage defect level as standard.
- H 37(Load inertia) : Uses the momentum amount of the load inertia to control energy buffering operation. If the inertia ratio is set high, the frequency change range gets small when running energy buffering.
-

## 8.20 DRAW drive

| Group | Display | Parameter Name | Setting | Range | Default | Unit |
|---|---|---|---|---|---|---|
| Function Group 1 | F70 | DRAW mode select | - | 0 ~ 3 | 0 | - |
| | F71 | DRAW ratio | - | 0.0 ~ 100.0 | 0.0 | % |

- It's a kind of open loop tension control that uses the speed difference of motor running under main frequency command to keep material's tension in between steady.
- The ratio reflected in the output frequency differs according to the selection of F70(DRAW mode select)

| | | | |
|---|---|---|---|
| F70 | Draw Operation | 0 | Draw not operated |
| | | 1 | V1(0~10V) input draw operation |
| | | 2 | I(0~20mA) input draw operation |
| | | 3 | V1(-10~10V) input draw operation |

- Select 1 and 2 for F70

  The center value of analogue input (selected by the set value of I6~I15) as standard, if the input is big it gets (+), if small (-) and gets reflected in the output frequency as the ratio set in F71.

- Select 3 for F70

  OV as standard, if analog input voltage is big, it gets (+), if small (-) and gets reflected in the output frequency as the ratio set in F71.

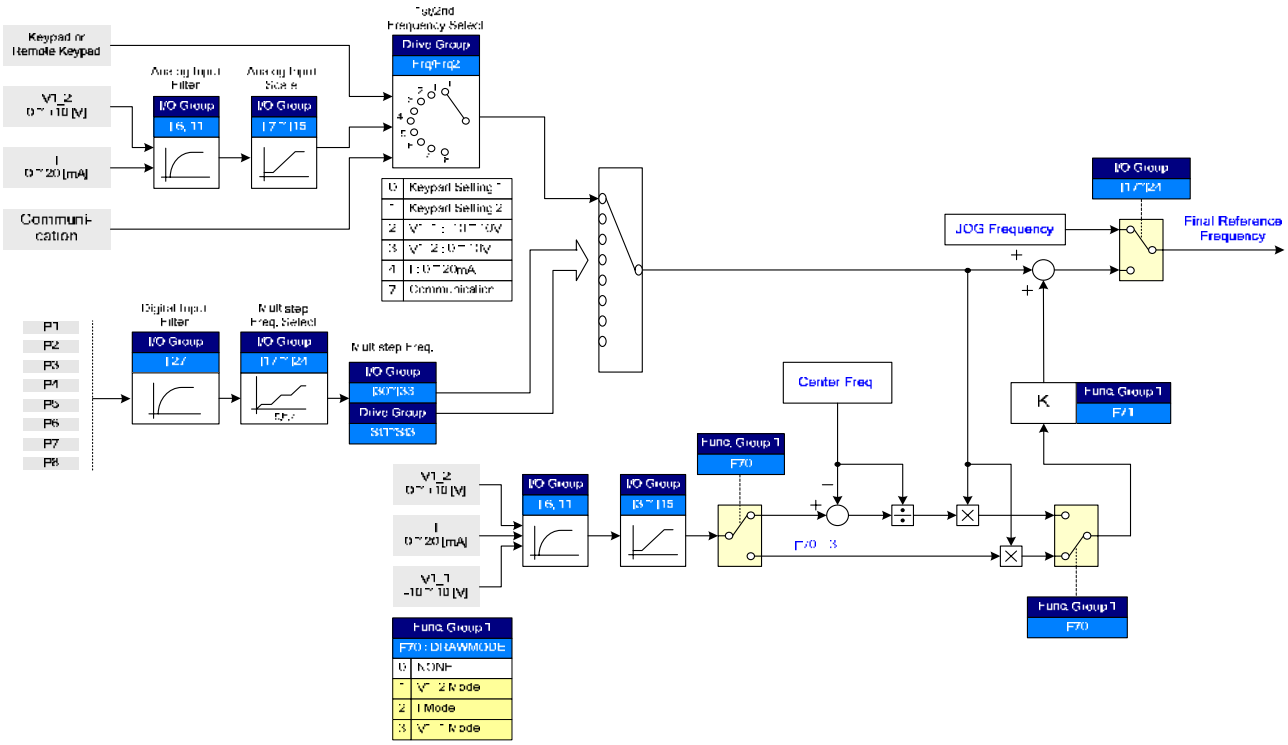


- DRAW operation example

  If draw operation is set to 30Hz, F70=3(V1: -10V ~ 10V), F71=10.0% selected, (I3~I15 = plant shipment) Frequency that gets changed by DRAW operation is 27Hz(V1=-10V) ~ 33Hz(V1=10V)

| ⚠ Caution |
|---|
| **When operating DRAW, set command frequency to FRQ/ FRQ2 and set the rest of it from F70(DRAW mode select). For example, if FRQ=2(V1) and F70=1(V1), it does not operate.** |

## 8.21 2 Phase PWM drive

| Group | Display | Parameter Name | Setting | Range | Default | Unit |
|---|---|---|---|---|---|---|
| Function Group 2 | H48 | PWM controlling mode<br>0: NORMAL PWM<br>1: 2 phase PWM | 1 | 0 ~ 1 | 0 | |

- Heat loss and leakage current from inverter can be reduced when H48 is set to 1(2 phase PWM) according to the ratio of load.

## 8.22 Cooling fan control

| Group | Display | Parameter Name | Setting | Range | Default | Unit |
|---|---|---|---|---|---|---|
| Function group 2 | H77 | [Cooling fan control] | 1 | 0 ~ 1 | 0 | |

- Control the On/ Off of the cooling fan to cool the Inverter heatsink.

- When it is set to 0:

-. Cooling fan begins to operate when power ON.
-. Cooling fan is stopped when inverter main circuit voltage becomes low voltage due to power off.

- When it is set to 1:

-. Cooling fan begins to operate when power is turned ON with operating command ON.
-. Cooling fan is stopped when operating command is turned Off with inverter output shut off.
-. Cooling fan keeps operating when heat sink temperature exceeds a certain limit regardless of operating command.
-. Used when frequent Run/Stop or quite stop is required. This may make the cooling fan life longer.

## 8.23 Operating mode select when cooling fan trip occurs

| Group | Display | Parameter Name | Setting | Range | Default | Unit |
|---|---|---|---|---|---|---|
| Function group 2 | H78 | [Operating mode when cooling fan trip occurs] | - | 0 ~ 1 | 0 | - |
| I/O group | I54 | [Multi-function output terminal select] | 18 | 0 ~ 19 | 12 | - |
| | I55 | [Multi-function relay select] | 18 | 0 ~ 19 | 17 | - |

- Select 0 or 1 in H78 code.
- If H78 code is set to 0 (continuous operation), alarm can be output in I54 or I55.

- 0: continuous operation when cooling fan trip occurs.

-. Operation is not stopped regardless of cooling fan trip.

-. When I54 or I55 is set to 18 (cooling fan fault alarm), fault alarm signal can be output using Multi-function output terminal or Multi-function relay.

| ⚠CAUTION |
| --- |
| If operation is continued after cooling fan trip occurs, Overheat trip may happen and protective function be activated. It also reduces the life of main components due to rise in inverter inner temperature. |

- 1: operation stopped at cooling fan fault

-. When cooling fan fault occurs, FAn message is displayed on the LED and operation is stopped.

-. If I54 or I55 is set to 17(Fault output), fault message is displayed.

## 8.24 Parameter read/write

| Group | Display | Parameter Name | Setting | Range | Default | Unit |
|---|---|---|---|---|---|---|
| Function group 2 | **H91** | **[Parameter read]** | **1** | 0 ~ 1 | 0 | |
| | **H92** | **[Parameter write]** | **1** | 0 ~ 1 | 0 | |

- Used to read/write Inverter Parameters using remote keypad.

| ⚠CAUTION |
|---|
| Take caution when Parameter write (H92) is executed. By doing this, parameters in inverter are cleared and parameters in remote keypad are copied to inverter. |

▸ Parameter read

| Step | Note | Keypad display |
|---|---|---|
| 1 | Move to H91 code. | H91 |
| 2 | Press Enter (●) key once. | 0 |
| 3 | Press Up (▲) key once. | Rd |
| 4 | Press Enter (●) key twice. | rd |
| 5 | H91 is displayed when Parameter read is finished. | H91 |

▸ Parameter write

| Step | Note | Keypad display |
|---|---|---|
| 1 | Move to H92 code. | H92 |
| 2 | Press Enter (●) key once. | 0 |
| 3 | Press Up (▲) key once. | Wr |
| 4 | Press Enter (●) key twice. | Wr |
| 5 | H91 is displayed when Parameter read is finished. | H92 |

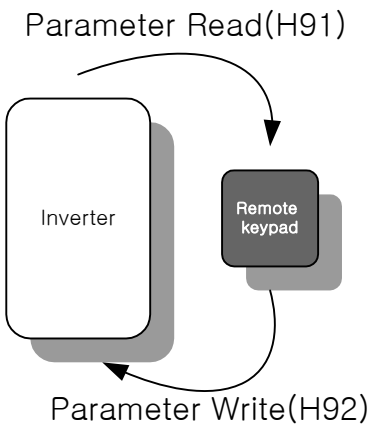

## 8.25 Parameter Initialize / Lock

- Parameter initialize

| Group | Display | Parameter Name | Range | | Default |
|---|---|---|---|---|---|
| Function group 2 | **H93** | **[Parameter initialize]** | **0** | - | 0 |
| | | | 1 | 4 groups initialize | |
| | | | 2 | Drive group initialize | |
| | | | 3 | F 1 group initialize | |
| | | | 4 | F 2 group initialize | |
| | | | 5 | I/O group initialize | |

- Select the group to be initialized and perform it in H93 code.

- Press Enter (●) key after setting in H93. H93 will be displayed again after initialization is complete.

- Password register

| Group | Display | Parameter Name | Setting | Range | Default | Unit |
|---|---|---|---|---|---|---|
| Function group 2 | **H94** | **[Password register]** | **-** | 0 ~ FFFF | 0 | |
| | H95 | [Parameter lock] | - | 0 ~ FFFF | 0 | |

- Register password for Parameter lock (H95).
- Password should be Hex decimal. (0 ~ 9, A, B, C, D, E, F)

| ⚠CAUTION |
|---|
| After setting modification lock function of H95, **Do not forget the registered password.** if you try to release lock, you need the registered password. |

- Factory default password is 0. Enter the new password except 0.
- Follow the steps below when you register the password for the first time.

| Step | Note | Keypad display |
|---|---|---|
| 1 | Move to H94 code. | H94 |
| 2 | Press Enter (●) key twice. | 0 |
| 3 | Register password. (Ex: 123) | 123 |
| 4 | 123 will blink when Enter (●) key is pressed. | 123 |
| 5 | Press Enter (●) key. | H94 |

- Follow the table below to change the password. (Current PW: 123 -> New PW: 456)

| Step | Note | Keypad display |
|---|---|---|
| 1 | Move to H94 code. | H94 |
| 2 | Press Enter (●) key. | 0 |
| 3 | Enter any number (e.g.: 122). | 122 |
| 4 | Press the Enter (●) key. 0 is displayed because wrong value was entered. Password cannot be changed in this status. | 0 |
| 5 | Enter the right password. | 123 |
| 6 | Press Enter (●) key. | 123 |
| 7 | Enter the new password. | 456 |
| 8 | Press the Enter (●) key. Then “456” will blink. | 456 |
| 9 | Press Enter (●) key. | H94 |

# CHAPTER 9 - MONITORING

## 9.1 Operating status monitoring

- Output current

| Group | Display | Parameter Name | Setting | Range | Default | Unit |
|---|---|---|---|---|---|---|
| Drive group | **CUr** | **[Output current]** | **-** | | | |

▪ Inverter output current can be monitored in Cur.

- Motor RPM

| Group | Display | Parameter Name | Setting | Range | Default | Unit |
|---|---|---|---|---|---|---|
| Drive group | **rPM** | **[Motor RPM]** | **-** | | | |
| Function group 2 | H31 | [Number of motor poles] | - | 2 ~ 12 | 4 | |
| | H49 | [PID control select] | - | 0 ~ 1 | 0 | |
| | H74 | [Gain for Motor rpm display] | - | 1 ~ 1000 | 100 | % |

▪ Motor rpm can be monitored in rPM.

- When H40 is set to 0 {V/F control} or 1 {PID control}, the Inverter output frequency (f) is displayed in RPM using the formula below. Motor slip is not considered.

$$RPM = \left(\frac{120 \times f}{H31}\right) \times \frac{H74}{100}$$

- In case that H49 code is 1, Feed back amount is converted into frequency.
- H31: Enter the number of rated motor poles on the nameplate.
- H74: This parameter is used to change the motor speed display to rotating speed (r/min) or mechanical speed (m/min).

- Inverter DC Link Voltage

| Group | Display | Parameter Name | Setting | Range | Default | Unit |
|---|---|---|---|---|---|---|
| Drive group | **dCL** | **[Inverter DC Link Voltage]** | **-** | | | |

▪ Inverter DC link voltage can be monitored in dCL.

- $\sqrt{2}$ times the value of input voltage is displayed while motor is at a stop.

- User display select

| Group | Display | Parameter Name | Setting | Range | Default | Unit |
|---|---|---|---|---|---|---|
| Drive group | **vOL** | **[User display select]** | **-** | | | |
| Function group 2 | H73 | [Monitoring item select] | - | 0 ~ 2 | 0 | |

- The selected item in H73- [Monitoring item select] can be monitored in vOL- [User display select.
- If output power or torque is selected, Por or tOr will be displayed.

▸ H73: Select one of the desired item numbers.

| | | | | |
|---|---|---|---|---|
| H73 | [Monitoring item select] | 0 | Output voltage [V] | vOL |
| | | 1 | Output power [kW] | POr |
| | | 2 | Torque [kgf · m] | tOr |

▸ Enter motor efficiency indicated on motor nameplate to H36 to display correct torque.

- Power on display

| Group | Code | Parameter | Setting range | | Initial |
|---|---|---|---|---|---|
| Function group 2 | **H72** | **[Power on display]** | **0** | Frequency command (0.00) | 0 |
| | | | **1** | Accel time (ACC) | |
| | | | **2** | Decel time (DEC) | |
| | | | **3** | Drive mode (drv) | |
| | | | **4** | Frequency mode (Frq) | |
| | | | **5** | Multi-step frequency 1(St1) | |
| | | | **6** | Multi-step frequency 2(St2) | |
| | | | **7** | Multi-step frequency 3(St3) | |
| | | | **8** | Output current (CUr) | |
| | | ` | **9** | Motor rpm (rPM) | |
| | | | **10** | Inverter DC link voltage (dCL) | |
| | | | **11** | User display select (vOL) | |
| | | | **12** | Fault display 1(nOn) | |
| | | | **13** | Operating direction select (drC) | |
| | | | **14** | Output current 2 | |
| | | | **15** | Motor rpm 2 | |
| | | | **16** | Inverter DC link voltage 2 | |
| | | | **17** | User display select 2 | |

- Select the parameter to be displayed on the keypad when Power ON.
- The output current, motor rpm, DC link voltage and User display select are displayed directly when 14~17 are set.

## 9.2 Monitoring the I/O terminal

- Input terminal status monitoring

| Group | Display | Parameter Name | Setting | Range | Default | Unit |
|---|---|---|---|---|---|---|
| I/O group | **I25** | **[Input terminals status display]** | **-** | | | |

▪ Current input terminal status (ON/Off) can be monitored in I25.

▸ The following is displayed when P1, P3, P4 are ON and P2, P5 are OFF.

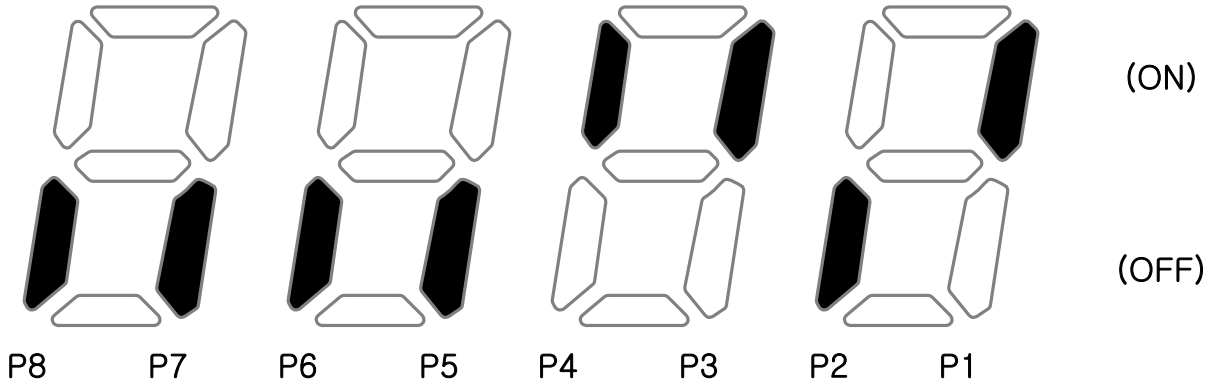


- Output terminal status monitoring

| Group | Display | Parameter Name | Setting | Range | Default | Unit |
|---|---|---|---|---|---|---|
| I/O group | **I26** | **[Output terminals status display]** | **-** | | | |

▪ Current output terminals (MO, relays) status (ON/Off) can be monitored in I26.

▸ The followings are displayed when Multi-function output terminal (MO) is ON with Multi-function relay OFF.

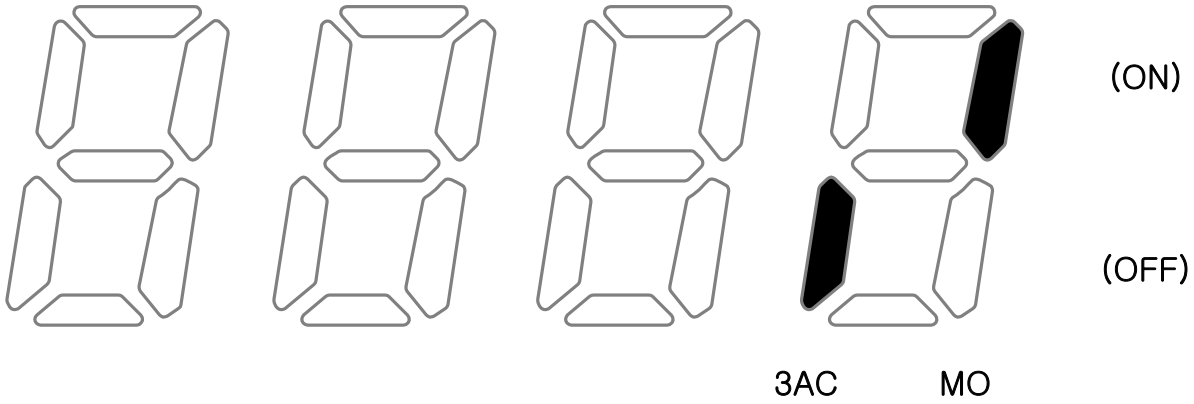

## 9.3 Monitoring fault condition

- Monitoring current fault status

| Group | Display | Parameter Name | Setting | Range | Default | Unit |
|---|---|---|---|---|---|---|
| Drive group | **nOn** | **[Current Fault Display]** | **-** | | | |

- Fault occurred during operation is displayed in nOn.
- Up to 3 kinds of faults can be monitored.

▸ This parameter gives information on fault types and the operating status at the time of the fault. Refer to Page 4-11 or 9-5 for keypad setting.

| | | | |
|---|---|---|---|
| Fault types | Frequency | 30.00 | |
| | Current | 5.0 | |
| | Accel/Decel Information | ACC | Fault during Accel |
| | | dEC | Fault during Decel |
| | | Std | Fault during constant run |

▸ Refer to Page 12-1 on fault types.

- Fault History Monitoring

| Group | Display | Parameter Name | Setting | Range | Default | Unit |
|---|---|---|---|---|---|---|
| Function group 2 | H 1 | [Fault history 1] | - | | | |
| | ~ | ~ | | | | |
| | H 5 | [Fault history 5] | | | | |
| | H 6 | [Reset fault history] | - | 0 ~ 1 | 0 | |

- H 1 ~ H 5: Up to 5 faults information is stored.
- H 6: Previous fault information stored in the code H1 thru H5 is all cleared.

▸ When a fault occurs during operation, it can be monitored in the **nOn**.

- When the fault condition is reset via the STOP/RST key or multi-function terminal, information displayed in the **nOn** will be moved to H1. In addition, the previous fault info stored in H1 will be automatically moved to H2. Therefore, the updated fault info will be stored in the H1.

- When more than 1 fault occurred at the same time, up to 3 types of faults will be stored in one code.

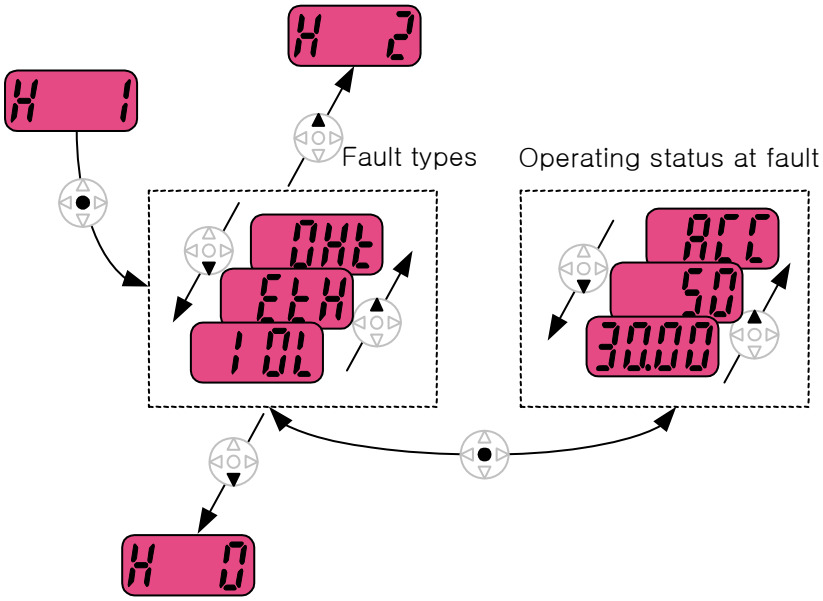

## 9.4 Analog Output

| Group | Display | Parameter Name | Setting | Range | Default | Unit |
|---|---|---|---|---|---|---|
| I/O group | **I50** | **[Analog output item select]** | **-** | 0 ~ 3 | 0 | |
| | I51 | [Analog output level adjustment] | - | 10 ~ 200 | 100 | % |

- Output item and the level from the AM terminal are selectable and adjustable.

- I50: The selected item will be output to Analog output terminal (AM).

| I50 | Analog output item select | | | Item corresponding to 10V | |
|---|---|---|---|---|---|
| | | | | 200V | 400V |
| | | 0 | Output frequency. | Max Frequency (F21) | |
| | | 1 | Output current | 150% of Inverter rated current | |
| | | 2 | Output voltage | 282Vac | 564Vac |
| | | 3 | Inverter DC link voltage | 400Vdc | 800Vdc |

- I51: If you want to use Analog output value as a gauge input, the value can be adjustable according to various gauge specifications.

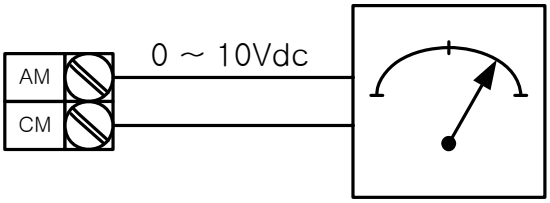

## 9.5 Multi-function output terminal (MO) and Relay (3AC)

| Group | Code | Parameter | Setting range | | | | Initial |
|---|---|---|---|---|---|---|---|
| I/O group | I54 | [Multi-function output terminal select] | 0 | FDT-1 | | | 12 |
| | | | 1 | FDT-2 | | | |
| | I55 | [Multi-function relay select] | 2 | FDT-3 | | | 17 |
| | | | 3 | FDT-4 | | | |
| | | | 4 | FDT-5 | | | |
| | | | 5 | Overload {OLt} | | | |
| | | | 6 | Inverter Overload {IOLt} | | | |
| | | | 7 | Motor stall {STALL} | | | |
| | | | 8 | Over voltage trip {OV} | | | |
| | | | 9 | Low voltage trip {LV} | | | |
| | | | 10 | Inverter overheat {OH} | | | |
| | | | 11 | Command loss | | | |
| | | | 12 | During run | | | |
| | | | 13 | During stop | | | |
| | | | 14 | During constant run | | | |
| | | | 15 | During speed searching | | | |
| | | | 16 | Wait time for run signal input | | | |
| | | | 17 | Fault output | | | |
| | | | 18 | Cooling fan trip alarm | | | |
| | | | 19 | Brake control signal | | | |
| | I56 | [Fault relay output] | | When setting the H26–[Number of auto restart tries] | When the trip other than low voltage trip occurs | When the low voltage trip occurs | |
| | | | | Bit 2 | Bit 1 | Bit 0 | |
| | | | 0 | - | - | - | 2 |
| | | | 1 | - | - | ✓ | |
| | | | 2 | - | ✓ | - | |
| | | | 3 | - | ✓ | ✓ | |
| | | | 4 | ✓ | - | - | |
| | | | 5 | ✓ | - | ✓ | |
| | | | 6 | ✓ | ✓ | - | |
| | | | 7 | ✓ | ✓ | ✓ | |

- Select the desired item to be output via MO terminal and relay (30AC).

- I56: When 17 {Fault display} is selected in I54 and I55, Multi-function output terminal and relay will be activated with the value in I56.

- 0: FDT-1
  - Check whether the output frequency matches the user-setting frequency.
  - Active condition: Absolute value (preset frequency - output frequency) <= Frequency Detection Bandwidth/2

| Group | Display | Parameter Name | Setting | Range | Default | Unit |
|---|---|---|---|---|---|---|
| I/O group | **I53** | **[Detected Frequency Bandwidth]** | **-** | 0 ~ 400 | 10.00 | Hz |

- Cannot be set above Max frequency (F21).

  - When setting I53 to 10.0

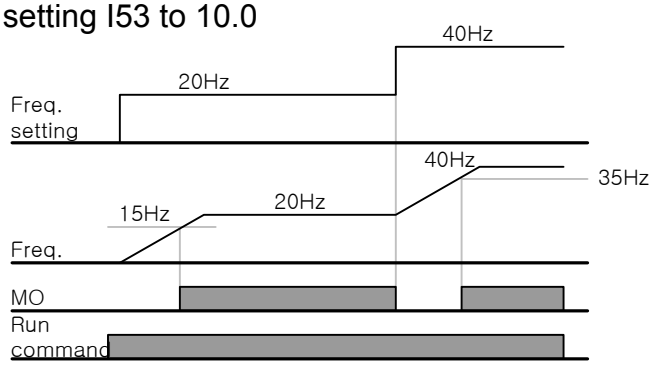


- 1: FDT-2
  - Activated when the preset frequency matches frequency detection level (I52) and FDT-1 condition is met.
  - Active condition: (Preset frequency = FDT level) & FDT-1

| Group | Display | Parameter Name | Setting | Range | Default | Unit |
|---|---|---|---|---|---|---|
| I/O group | **I52** | **[Detected Frequency level]** | **-** | 0 ~ 400 | 30.00 | Hz |
| | **I53** | **[Detected Frequency Bandwidth]** | **-** | | 10.00 | |

- Cannot be set above Max frequency (F21).

  - When setting I52 and I53 to 30.0 Hz and 10.0 Hz, respectively

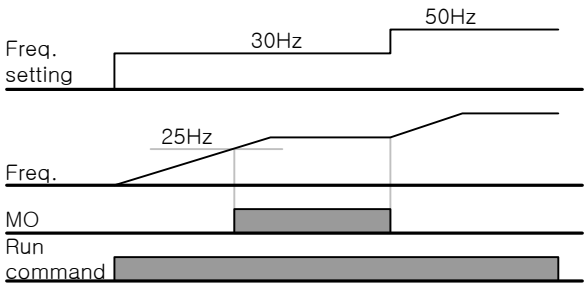

- 2: FDT-3
  - Activated when run frequency meets the following condition.
  - Active condition: Absolute value (FDT level - run frequency) <= FDT Bandwidth/2

| Group | Display | Parameter Name | Setting | Range | Default | Unit |
|---|---|---|---|---|---|---|
| I/O group | I52 | [Detected Frequency level] | - | 0 ~ 400 | 30.00 | Hz |
| | I53 | [Detected Frequency Bandwidth] | - | | 10.00 | |

- Cannot be set above Max frequency (F21).

- When setting I52 and I53 to 30.0Hz and 10.0 Hz, respectively

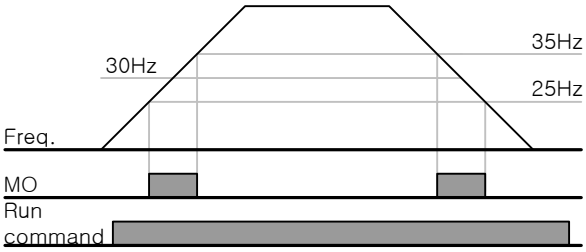


- 3: FDT-4
  - Activated when run frequency meets the following condition.

    Active condition:

    Accel time: Run Frequency >= FDT Level

    Decel time: Run Frequency > (FDT Level – FDT Bandwidth/2)

| Group | Display | Parameter Name | Setting | Range | Default | Unit |
|---|---|---|---|---|---|---|
| I/O group | I52 | [Detected Frequency level] | - | 0 ~ 400 | 30.00 | Hz |
| | I53 | [Detected Frequency Bandwidth] | - | | 10.00 | |

- Cannot be set above Max frequency (F21).

  - When setting I52 and I53 to 30.0Hz and 10.0 Hz, respectively

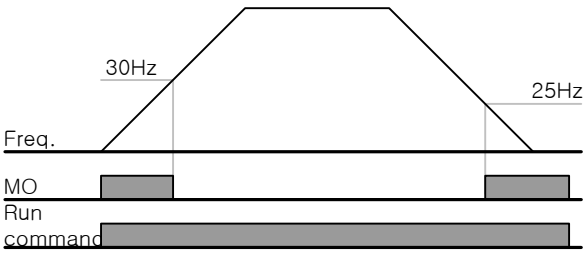

- 4: FDT-5
  - Activated as B contact contrast to FDT-4.

    Active condition:

    Accel time: Run Frequency >= FDT Level

    Decel time: Run Frequency > (FDT Level – FDT Bandwidth/2)

| Group | Display | Parameter Name | Setting | Range | Default | Unit |
|---|---|---|---|---|---|---|
| I/O group | I52 | [Detected Frequency level] | - | 0 ~ 400 | 30.00 | Hz |
| | I53 | [Detected Frequency Bandwidth] | - | | 10.00 | |

- Cannot be set above Max frequency (F21).

  - When setting I52 and I53 to 30.0Hz and 10.0 Hz, respectively

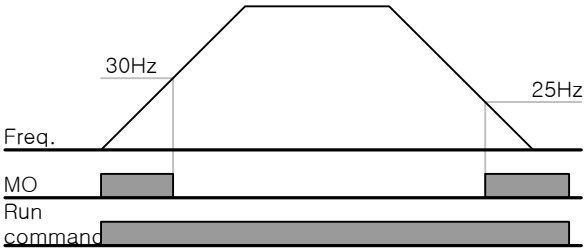


- 5: Overload (OLt)
  - Refer to page 10-2.
- 6: Inverter Overload (IOLt)
  - Refer to page 10-6.
- 7: Motor stall (STALL)
  - Refer to page 10-3.
- 8: Over voltage trip (Ovt)
  - Activated when over voltage trip occurs due to DC link voltage exceeded 400Vdc for 200V class and 820Vdc for 400V class.
- 9: Low voltage trip (Lvt)
  - Activated when low voltage trip occurs due to DC link voltage under 180Vdc for 200V class and 360Vdc for 400V class.
- 10: Inverter heatsink overheat (OHt)
  - Activated when the heatsink is overheated.
- 11: Command loss
  - Activated when Analog (V1,I) and RS485 communication commands are lost.

- 12: During operation
  - Activated when run command is input and inverter outputs its voltage.

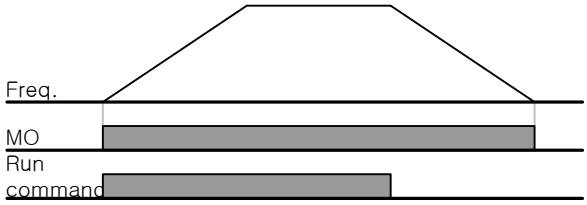


- 13: During stop
  - Activated during stop without active command.

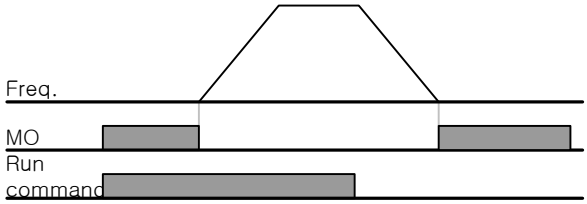


- 14: during constant run
  - Activated during constant speed operation.

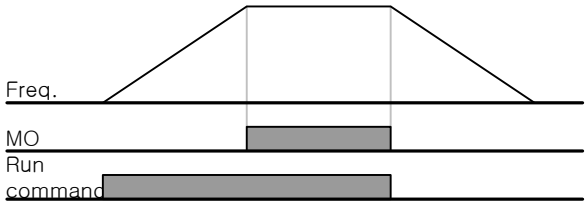


- 15: During speed searching
  - Refer to page 8-17.

- 16: Wait time for run signal input
  - This function becomes active during normal operation and that the inverter waits for active run command from external sequence.

- 17: Fault output
  - The parameter set in I56 is activated.
  - For example, if setting I55, I56 to 17 and 2, respectively, Multi-function output relay will become active when trip other than “Low voltage trip” occurred.

- 18: Cooling fan trip alarm
  - Used to output alarm signal when H78 is set to 0(constant operation at cooling fan trip). Refer to page 8-31.
- 19: Brake signal
  - It is used for signal output when set for use of external brake signal. Refer to the page 8-26.

## 9.6 Output terminal select at loder communication error

| Group | Display | Parameter Name | Setting | Range | Default | Unit |
|---|---|---|---|---|---|---|
| I/O group | **I57** | **[Output terminal select when communication error with keypad]** | **-** | 0 ~ 3 | 0 | |

- Select relay output or open collector output when keypad-inverter communication fails.

▸ Keypad and inverter CPU communication is made by serial communication, delivering information. When communication error occurs for a certain time, Err will be displayed and error signal can be output to MO or relays.

| | MFI output relay | MFI output terminal |
|---|---|---|
| | Bit 1 | Bit 0 |
| 0 | - | - |
| 1 | - | ✓ |
| 2 | ✓ | - |
| 3 | ✓ | ✓ |

▸ 0: Not used
▸ 1: Signal output to MO
▸ 2: Signal output to 3A, 3B contacts
▸ 3: Signal output to MO, 3A, 3B

# CHAPTER 10 - PROTECTIVE FUNCTIONS

## 10.1 Electronic Thermal

| Group | Code | Parameter | Set | Range | Initial | Unit |
|---|---|---|---|---|---|---|
| Function group 1 | **F50** | **[ETH (Electronic thermal) select]** | **1** | 0 ~ 1 | 0 | |
| | F51 | [Electronic thermal level for 1 minute] | - | 50 ~ 200 | 150 | % |
| | F52 | [Electronic thermal level for continuous] | - | 50 ~ 150 | 100 | % |
| | F53 | [Motor type] | - | 0 ~ 1 | 0 | |

- Select F50 – [Electronic thermal select] to 1.
- It activates when the motor is overheated (time-inverse). If current greater than set in F51 flows, inverter output is turned off for the preset time in F51- [Electronic thermal level for 1 minute].

- F51: Enter the value of max current that is capable of flowing to the motor continuously for one minute. It is set in percent of motor rated current. The value cannot be set lower than F52.

- F52: Enter the amount of current for continuous operation. Normally motor rated current is used. It cannot be set greater than F51.

- F53: For an inductance motor, cooling effects decrease when a motor is running at low speed. A special motor is a motor that uses a separately powered cooling fan maximize cooling effect even in low speed.

| | | | |
|---|---|---|---|
| F53 | [Motor type] | 0 | Standard motors having a cooling fan directly connected to the shaft |
| | | 1 | Special motor that uses a separately powered cooling fan. |

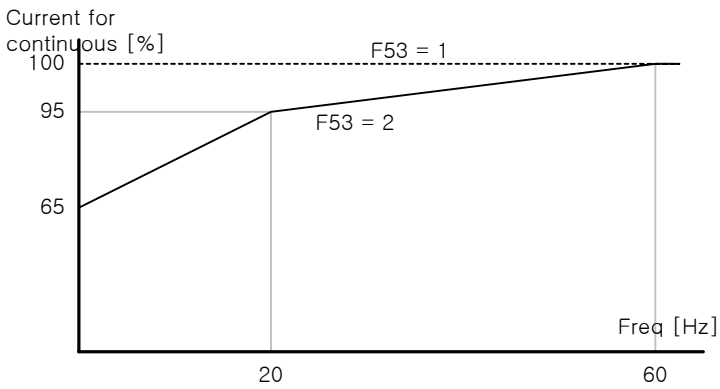

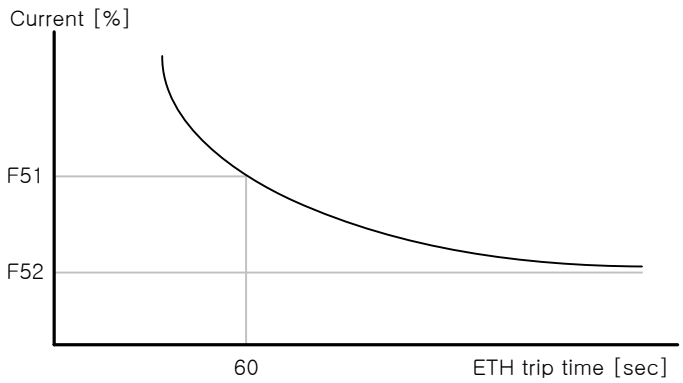


## 10.2 Overload Warning and trip

- Overload warning

| Group | Code | Parameter | Set | Range | Initial | Unit |
|---|---|---|---|---|---|---|
| Function group 1 | **F54** | **[Overload warning level]** | **-** | 30 ~ 150 | 150 | % |
| | **F55** | **[Overload warning time]** | **-** | 0 ~ 30 | 10 | Sec |
| I/O group | **I54** | **[Multi-function output terminal select]** | **5** | 0 ~ 19 | 12 | |
| | I55 | [Multi-function relay select] | 5 | | 17 | |

- Select one output terminal for this function between MO and 3ABC.
- If selecting MO as output terminal, set I54 to 5 {Overload: OL}

▸ F54: Set the value as a percent of motor rated current.

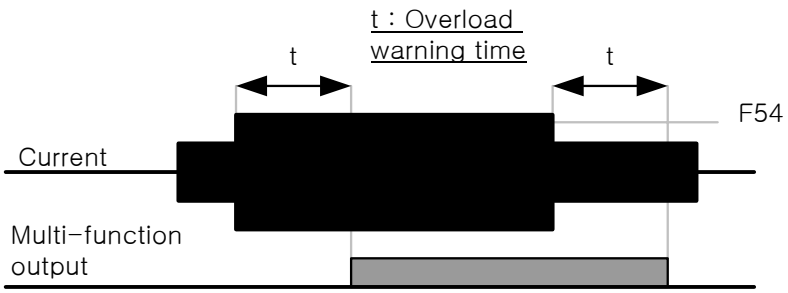

- Overload trip

| Group | Code | Parameter | Set | Range | Initial | Unit |
|---|---|---|---|---|---|---|
| Function group 1 | **F56** | **[Overload trip select]** | **1** | 0 ~ 1 | 1 | |
| | F57 | [Overload trip level] | - | 30 ~ 200 | 180 | % |
| | F58 | [Overload trip time] | - | 0 ~ 60 | 60 | sec |

- Set F56 to 1.
- Inverter output is turned off when motor is overloaded.
- Inverter output is turned off when excessive current flows to the motor for F58 – [Overload trip time].

## 10.3 Stall prevention

| Group | Code | Parameter | Set | Range | Initial | Unit |
|---|---|---|---|---|---|---|
| Function group 1 | **F59** | **[Stall prevention select]** | **-** | 0 ~ 7 | 0 | |
| | **F60** | **[Stall prevention level]** | **-** | 30 ~ 200 | 150 | % |
| I/O group | I54 | [Multi-function output terminal select] | 7 | 0 ~19 | 12 | |
| | I55 | [Multi-function relay select] | 7 | | 17 | |

- During acceleration: Motor starts deceleration when current exceeding the value set in F60 flows.
- During constant run: Motor decelerates when current exceeding the value set in F60 flows.
- During deceleration: Motor deceleration is stopped when inverter DC link voltage rises above a certain voltage level.
- F60: The value is set as the percent of motor rated current (H33).
- I54, I55: Inverter outputs signals through multi-function output terminal (MO) or relay output (3ABC) or external sequence when stall prevention function is activated. Motor stall status still can be monitored in these codes though F59 is not selected (000).

▸ F59: Stall prevention can be set as the table below.

| F59 | Stall prevention | Setting | During Deceleration | During constant speed | During Acceleration |
|---|---|---|---|---|---|
| | | | Bit 2 | Bit 1 | Bit 0 |
| | | 0 | - | - | - |
| | | 1 | - | - | ✓ |
| | | 2 | - | ✓ | - |
| | | 3 | - | ✓ | ✓ |
| | | 4 | ✓ | - | - |
| | | 5 | ✓ | - | ✓ |
| | | 6 | ✓ | ✓ | - |
| | | 7 | ✓ | ✓ | ✓ |

- For example, set F59 to 3 to make stall prevention active during Acceleration and constant run.
- When stall prevention is executed during acceleration or deceleration, Accel/Decel time may take longer than the user-setting time.
- When stall prevention is activated during constant run, t1, t2 executed in accordance with the value set in ACC - [Accel time] and dEC - [Decel time].

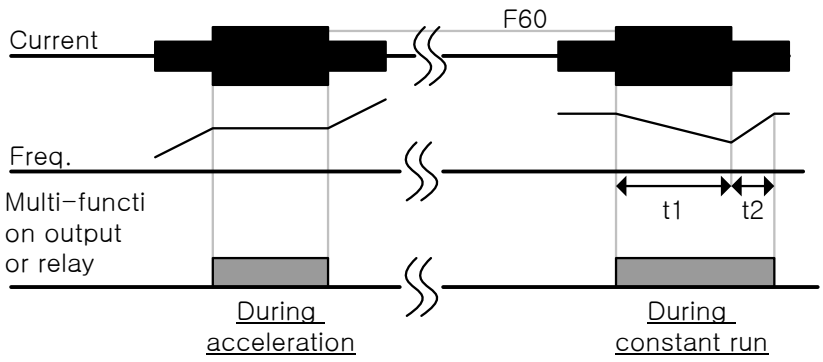


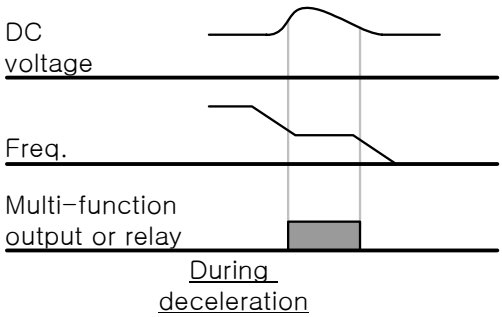

## 10.4 Output phase loss protection

| Group | Code | Parameter | Set | Range | Initial | Unit |
|---|---|---|---|---|---|---|
| Function group 2 | **H19** | **[Input/Output phase loss protection select]** | **1** | 0 ~ 3 | 0 | |

- Set H19 value to 1.
- Output phase loss: Inverter output is shut off at the event of more than one phase loss among U, V and W.
- Input phase loss: Inverter output is blocked at the event of more than one phase loss among R, S and T. If there is no input phase loss, output is shut off when it is time to replace DC link capacitor.

| ⚠CAUTION |
|---|
| Set H33 [Motor rated current] correctly. If the actual motor rated current and the value of H33 are different, output phase loss protection function could not be activated. |

| | | | |
|---|---|---|---|
| H19 | [Input/Output phase loss protection select] | 0 | Not used |
| | | 1 | Output phase loss protection |
| | | 2 | Input phase loss protection |
| | | 3 | Input/output phase loss protection |

## 10.5 External trip signal

| Group | Code | Parameter | Set | Range | Initial | Unit |
|---|---|---|---|---|---|---|
| I/O group | I17 | [Multi-function input terminal P1 define] | | 0 ~ 25 | 0 | |
| | ~ | ~ | | | | |
| | **I23** | **[Multi-function input terminal P7 define]** | **18** | | 6 | |
| | **I24** | **[Multi-function input terminal P8 define]** | **19** | | 7 | |

- <u>Select a terminal among P1 thru P8 to output external trip signal.</u>
- Set I23 and I24 to 18 and 19 to define P7 and P8 as External A contact and B contact.

- External trip signal input A contact (N.O.): Normal open contact input. When a P7 terminal set to “Ext trip-A” is ON (Closed), inverter displays the fault and turns off its output.
- External trip signal input B contact (N.C.): Normal close contact input. When a P8 terminal set to “Ext trip-B” is OFF (Open), inverter displays the fault and turns off its output.

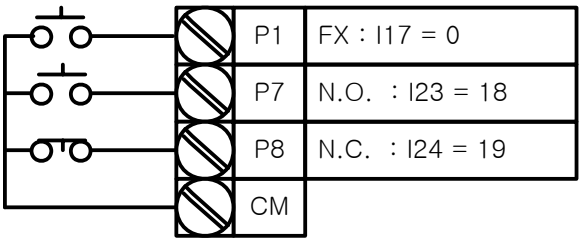


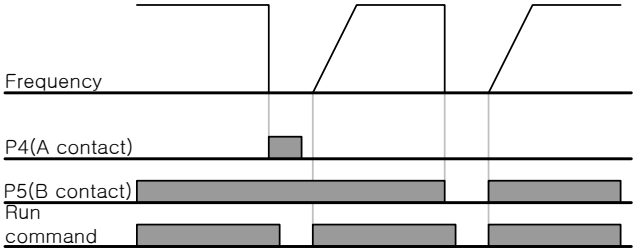


## 10.6 Inverter Overload

| Group | Code | Parameter | Set | Range | Initial | Unit |
|---|---|---|---|---|---|---|
| I/O group | I54 | [Multi-function output terminal select] | 6 | 0 ~ 19 | 12 | |
| | I55 | [Multi-function relay select] | 6 | | 17 | |

- Inverter overload prevention function is activated when the current above inverter rated current flows.
- Multi-function output terminal (MO) or Multi-function relay (3ABC) is used as the alarm signal output during inverter overload trip.

## 10.7 Speed command loss

| Group | Code | Parameter | Set | Range | Initial | Unit |
|---|---|---|---|---|---|---|
| I/O group | **I16** | **[Select criteria for analog speed command loss]** | **0** | 0 ~ 2 | 0 | |
| | **I62** | **[Drive mode select at loss of speed command]** | **-** | 0 ~ 2 | 0 | |
| | **I63** | **[Wait time after loss of speed command]** | **-** | 0.1 ~ 120 | 1.0 | sec |
| | I54 | [Multi-function output terminal select] | 11 | 0 ~ 19 | 12 | |
| | I55 | [Multi-function relay select] | 11 | | 17 | |

- Select the Drive mode when frequency reference set via Analog (V1, I) input terminal or communication option is lost.

- I16: This is to set the criteria for analog input signal loss.

| | | | |
|---|---|---|---|
| I16 | [Criteria for analog input signal loss] | 0 | Disabled (Does not check the analog input signal loss) |
| | | 1 | When half the value set in I2, I7, I12 is entered |
| | | 2 | When less than the value set in I 2, I 7, I 12 is entered |

Ex 1) The inverter determines the freq reference is lost when DRV- Frq is set to 3 (Analog V1 input), I 16 to 1 and analog input signal is less than half the value set in I 7.

Ex 2) The inverter determines the freq reference is lost when DRV- Frq is set to 6 (V1+I), I 16 to 2 and V1 input signal is either below the value set in I 7 or I input value is less than the I 12 value.

- I62: When no frequency command is given for the time set in I63, set the drive mode as the table below.

| | | | |
|---|---|---|---|
| I62 | [Drive mode select after loss of frequency command] | 0 | Continuous operation with the frequency before command loss occurs |
| | | 1 | Free run stop (output cut off) |
| | | 2 | Decel to stop |

- I54, I55: Multi-function output terminal (MO) or Multi-function relay output (3ABC) is used to output information on loss of frequency command to external sequence.
  Ex) when I16 is set to 2, I62 to 2, I63 to 5.0 sec and I54 to 11, respectively,

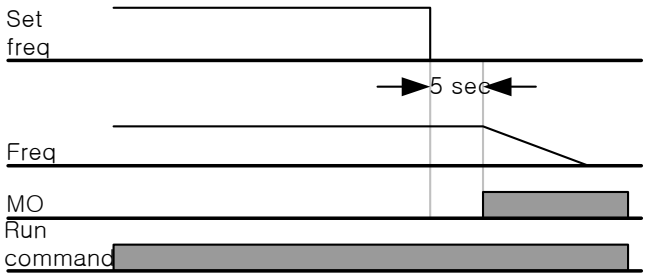


## 10.8 DB Resistor Enable Duty setting

| Group | Code | Parameter | Set | Range | Initial | Unit |
|---|---|---|---|---|---|---|
| Function group 2 | **H75** | **[Enable duty limit]** | **1** | 0 ~ 1 | 1 | |
| | H76 | [Enable duty] | - | 0 ~ 30 | 10 | % |

- Set H75 to 1.
- Set %ED (Enable Duty) in H76.

- H75: DB resistor ED limit setting

| | |
|---|---|
| 0 | No limit |
| | ⚠ Caution |
| | Take caution when DB resistor is used over its Watt rating. Fire may result from resistor overheat. When resistor having heat detection sensor is used, sensor output can be used as external trip signal in multi-function input. |
| 1 | ED is limited as the setting in H 76. |

- H76: set the resistor operating rate(%ED) in one sequence of operation. Continuous usage reate is Max 15 sec and usage signal is not issued over 15 sec.

Ex 1)
$$H76 = \frac{T_dec}{T_acc + T_steady + T_dec + T_stop} \times 100[\%]$$

Where,

T_acc: Acceleration time to reach a setting freq.

T_steady: Time for constant speed operation at setting freq.

T_dec: Time to decelerate to lower freq. than that in constant speed or time to stop from freq. in constant speed.

T_stop: waiting time at a stop before operation is resumed.

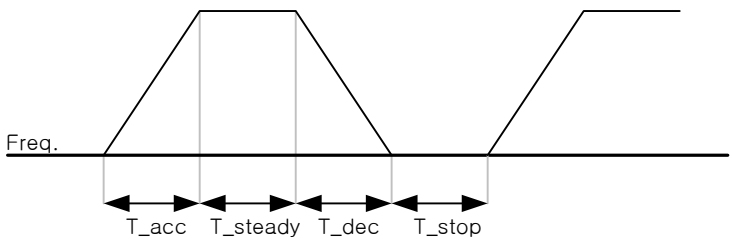


Ex 2)
$$H76 = \frac{T_dec}{T_dec + T_steady1 + T_acc + T_steady2} \times 100[\%]$$

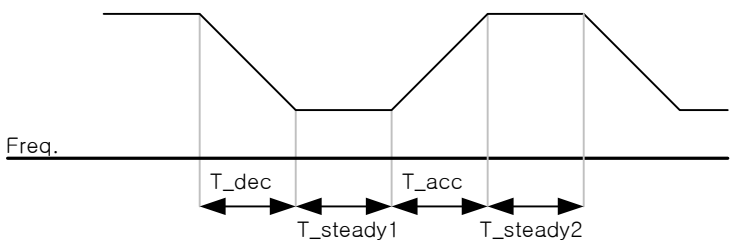

# CHAPTER 11 - RS485 COMMUNICATION

## 11.1 Introduction

Inverter can be controlled and monitored by the sequence program of the PLC or other master module.

Drives or other slave devices may be connected in a multi-drop fashion on the RS-485 network and may be monitored or controlled by a single PLC or PC. Parameter setting and change are available through PC.

- Features

Inverter can be easily applied for factory automation because operation and monitoring is available by User-program.

* Parameter change and monitoring is available via computer.
  (Ex: Accel/Decel time, Freq. Command etc.)
* Interface type of RS485 reference:
  1) Allows the drive to communicate with any other computers.
  2) Allows connection of up to 31 drives with multi-drop link system.
  3) Noise-resistant interface.

Users can use any kind of RS232-485 converters. The specifications of converters depend on the manufacturers. Refer to the converter manual for detailed specifications.

- Before installation

Before installation and operation, this should be read thoroughly. If not, it can cause personal injury or damage to other equipment.

## 11.2 Specification

- Performance specification

| Item | Specification |
|---|---|
| Communication method | RS485 |
| Transmission form | Bus method, Multi drop Link System |
| Applicable inverter | SV-iG5A series |
| Converter | RS232 converter |
| Connectable drives | Max 31 |
| Transmission distance | Max. 1,200m (Within 700m Recommend) |

- Hardware specification

| Item | Specification |
|---|---|
| Installation | Use S+, S- terminals on control terminal block |
| Power supply | Use Insulated power from the inverter power supply |

- Communication specification

| Item | Specification |
|---|---|
| Communication speed | 19,200/9,600/4,800/2,400/1,200 bps selectable |
| Control procedure | Asynchronous communication system |
| Communication system | Half duplex system |
| Character system | ASCII (8 bit) |
| Stop bit length | Modbus-RTU: 2 bit LS Bus: 1 bit |
| Sum check | 2 byte |
| Parity check | None |

## 11.3 Installation

- Connecting the communication line

Connect the RS-485 communication line to the inverter's (S+), (S-) terminals of the control terminals.
Check the connection and turn ON the inverter.
If the communication line is connected correctly set the communication-related parameters as the following:

- DRV-03 [Drive mode]: 3(RS485)
- DRV-04 [Freq. mode]: 7(RS485)
- I/O-60 [Inv. Number]: 1~250 (If more than 1 inverters are connected, be sure to use different numbers for each inverter)
- I/O-61 [Baud-rate]: 3 (9,600 bps as Factory default)
- I/O-62 [Lost Mode]: 0 - No action (Factory default)
- I/O-63 [Time-Out]: 1.0 sec (Factory default)
- I/O-59 [Comm. Prot]: 0 - Modbus-RTU, 1 – LS BUS

- Computer and inverter connection

System configuration

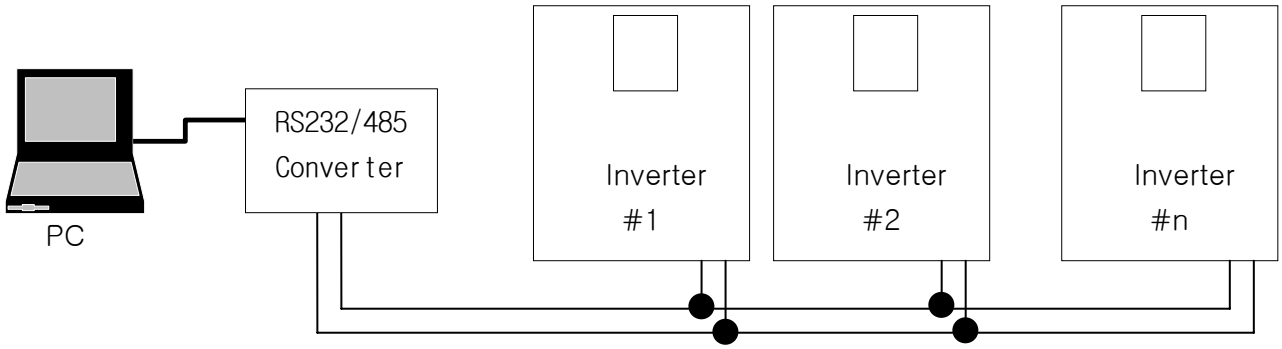


- The number of drives to be connected is up to 31 drives.
- The specification of length of communication line is max. 1200m. To ensure stable communication, limit the length below 700m.

## 11.4 Operation

- Operating steps

Check whether the computer and the inverter are connected correctly.
Turn ON the inverter. But do not connect the load until stable communication between the computer and the inverter is verified.
Start the operating program for the inverter from the computer.
Operate the inverter using the operating program for the inverter.
Refer to “Troubleshooting” if the communication is not operating normally.

*User program or the “DriveView” program supplied from LS Industrial Systems can be used as the operating program for the inverter.

## 11.5 Communication protocol (MODBUS-RTU)

Use Modbus-RTU protocol (Open protocol).

Computer or other hosts can be Master and inverters Slave. Inverter responds to Read/Write command from Master.

Supported function code

| Function code | Description |
|---|---|
| 0x03 | Read Hold Register |
| 0x04 | Read Input Register |
| 0x06 | Preset Single Register |
| 0x10 | Preset Multiple Register |

Exception code

| Function code | | Description |
|---|---|---|
| 0x01 | | ILLEGAL FUNCTION |
| 0x02 | | ILLEGAL DATA ADDRESS |
| 0x03 | | ILLEGAL DATA VALUE |
| 0x06 | | SLAVE DEVICE BUSY |
| User define | 0x14 | 1.Write Disable (Address 0x0004 value is 0).<br>2.Read Only or Not Program during Running. |

## 11.6 Communication protocol (LS BUS)

- Basic format

Command message (Request):

| ENQ | Drive No. | CMD | Data | SUM | EOT |
|---|---|---|---|---|---|
| 1 byte | 2 bytes | 1 byte | n bytes | 2 bytes | 1 byte |

Normal response (Acknowledge Response):

| ACK | Drive No. | CMD | Data | SUM | EOT |
|---|---|---|---|---|---|
| 1 byte | 2 bytes | 1 byte | n * 4 bytes | 2 bytes | 1 byte |

Negative response (Negative Acknowledge Response):

| NAK | Drive No. | CMD | Error code | SUM | EOT |
|---|---|---|---|---|---|
| 1 byte | 2 bytes | 1 byte | 2 bytes | 2 bytes | 1 byte |

Description:

Request starts with “ENQ” and ends with “EOT”.

Acknowledge Response starts with “ACK” and ends with “EOT”.

Negative Acknowledge Response starts with ”NAK” and ends with “EOT”.

“Drive Number” is the number of drives and indicated in 2 bite ASCII-HEX.

(ASCII-HEX: Hexadecimal consists of ‘0’ ~ ‘9’, ‘A’ ~ ‘F)

CMD: Capital letter

| Character | ASCII-HEX | Command |
|---|---|---|
| ‘R’ | 52h | Read |
| ‘W’ | 57h | Write |
| ‘X’ | 58h | Request for monitoring |
| ‘Y’ | 59h | Action for monitoring |

Data: ASCII-HEX

Ex) when data value is 3000: 3000 (dec) → ‘0’ ’B’ ’B’ ’8’h → 30h 42h 42h 38h

Error code: ASCII (20h ~ 7Fh)

Receive/Send buffer size: Receive= 39 bite, Send=44 bite

Monitor register buffer: 8 Word

SUM: to check the communication error

SUM= ASCII-HEX format of lower 8 bit of (Drive No. + CMD + DATA)

Ex) Command Message (Request) for reading one address from address “3000”

| ENQ | Drive No | CMD | Address | Number of address to read | SUM | EOT |
|---|---|---|---|---|---|---|
| 05h | “01” | “R” | “3000” | “1” | “A7” | 04h |
| 1 byte | 2 bytes | 1 byte | 4 bytes | 1 byte | 2 bytes | 1 byte |

SUM = ‘0’ + ‘1’ + ’R’ + ‘3’ + ‘0’ + ‘0’ + ‘0’ + ‘1’

= 30h + 31h + 52h + 33h + 30h + 30h + 30h + 31h

= 1A7h (Control values such as ENQ/ACK/NAK are excluded.)

- Detail communication protocol

1) Request for Read: Request for read successive ‘N’ numbers of WORD from address “XXXX”

| ENQ | Drive No | CMD | Address | Number of address to read | SUM | EOT |
|---|---|---|---|---|---|---|
| 05h | “01” ~ “1F” | “R” | “XXXX” | “1” ~ “8” = n | “XX” | 04h |
| 1 byte | 2 bytes | 1 byte | 4 bytes | 1 byte | 2 bytes | 1 byte |

Total bite = 12

The quotation marks (“ ”) means character.

1.1) Acknowledge Response:

| ACK | Drive No | CMD | Data | SUM | EOT |
|---|---|---|---|---|---|
| 06h | “01” ~ “1F” | “R” | “XXXX” | “XX” | 04h |
| 1 byte | 2 bytes | 1 byte | N * 4 bytes | 2 byte | 1 byte |

Total bite = 7 + n * 4 = Max 39

1.2) Negative Acknowledge Response:

| NAK | Drive No | CMD | Error code | SUM | EOT |
|---|---|---|---|---|---|
| 15h | “01” ~ “1F” | “R” | “**” | “XX” | 04h |
| 1 byte | 2 bytes | 1 byte | 2 bytes | 2 bytes | 1 byte |

Total bite = 9

2) Request for Write:

| ENQ | Drive No | CMD | Address | Number of address to read | Data | SUM | EOT |
|---|---|---|---|---|---|---|---|
| 05h | “01”~ “1F” | “W” | “XXXX” | “1” ~ “8” = n | “XXXX…” | “XX” | 04h |
| 1 byte | 2 bytes | 1 byte | 4 bytes | 1 byte | n * 4 bytes | 2 byte | 1 byte |

Total bite = 12 + n * 4 = Max 44

2.1) Acknowledge response:

| ACK | Drive No | CMD | Data | SUM | EOT |
|---|---|---|---|---|---|
| 06h | “01” ~ “1F” | “W” | “XXXX…” | “XX” | 04h |
| 1:byte | 2:bytes | 1:byte | n * 4 bytes | 2 bytes | 1 byte |

Total bite = 7 + n * 4 = Max 39

**Note**

When Request for Write and Acknowledge Response is exchanged between PC and Inverter for the first time, previous data is returned. From the second time of transmission, the current data will be returned.

2.2) Negative response:

| NAK | Drive No | CMD | Error code | SUM | EOT |
|---|---|---|---|---|---|
| 15h | “01” ~ “1F” | “W” | “**” | “XX” | 04h |
| 1 byte | 2 bytes | 1 byte | 2 bytes | 2 bytes | 1 byte |

Total bite = 9

3) Request for Monitor Register

This is useful when constant parameter monitoring and data updates are required.

Request for Register of ‘n’ numbers of Address (not consecutive)

| ENQ | Drive No | CMD | Number of address to read | Address | SUM | EOT |
|---|---|---|---|---|---|---|
| 05h | “01” ~ “1F” | “X” | “1” ~ “8”=n | “XXXX…” | “XX” | 04h |
| 1 byte | 2 bytes | 1 byte | 1 byte | n * 4 byte | 2 byte | 1 byte |

Total bite = 8 + n * 4 = Max 40

3.1) Acknowledge Response:

| ACK | Drive No | CMD | SUM | EOT |
|---|---|---|---|---|
| 06h | “01” ~ “1F” | “X” | “XX” | 04h |
| 1 byte | 2 bytes | 1 byte | 2 bytes | 1 byte |

Total bite = 7

3.2) Negative Acknowledge Response:

| NAK | Drive No | CMD | Error code | SUM | EOT |
|---|---|---|---|---|---|
| 15h | “01” ~ “1F” | “X” | “**” | “XX” | 04h |
| 1 byte | 2 bytes | 1 byte | 2 bytes | 2 bytes | 1 byte |

Total bite = 9

4) Action Request for monitor register: Request for read of address registered by monitor register.

| ENQ | Drive No | CMD | SUM | EOT |
|---|---|---|---|---|
| 05h | “01” ~ “1F” | “Y” | “XX” | 04h |
| 1 byte | 2 bytes | 1 byte | 2 bytes | 1 byte |

Total bite = 7

4.1) Acknowledge response:

| ACK | Drive No | CMD | Data | SUM | EOT |
|---|---|---|---|---|---|
| 06h | “01” ~ “1F” | “Y” | “XXXX…” | “XX” | 04h |
| 1 byte | 2 bytes | 1 byte | n * 4 bytes | 2 bytes | 1 byte |

Total bite= 7 + n * 4 = Max 39

4.2) Negative response:

| NAK | Drive No | CMD | Error code | SUM | EOT |
|---|---|---|---|---|---|
| 15h | “01” ~ “1F” | “Y” | “**” | “XX” | 04h |
| 1 byte | 2 bytes | 1 byte | 2 bytes | 2 bytes | 1 byte |

Total bite = 9

5) Error code

| Error code | Description |
|---|---|
| “IF” | When master is sending codes other than Function code (R, W, X, Y). |
| “IA” | When parameter address does not exist |
| “ID” | When Data value exceeds its permissible range during ‘W’ (Write). |
| “WM” | When the specific parameters cannot be written during ‘W’ (Write).<br>(For example, in the case of Read Only, Write disabled during Run) |
| “FE” | When frame size of specific function is not correct and Checksum field is wrong. |

## 11.7 Parameter code list <Common area>

<Common area>: Area accessible regardless of inverter models (Note 3)

| Address | Parameter | Scale | Unit | R/W | Data value |
|---|---|---|---|---|---|
| 0x0000 | Inverter model | | | R | 0: SV-iS3<br>1: SV-iG<br>2: SV-iV<br>3: SV-iH<br>4: SV-iS5<br>5:SV-iV5<br>7: SV-iG5<br>8: SV-iC5<br>9: SV-iP5<br>A: SV-iG5A |
| 0x0001 | Inverter capacity | | | R | FFFF 0.4kW 0000 0.75kW 0002 1.5kW<br>0003 2.2kW 0004 3.7kW 0005 4.0kW<br>0006 5.5kW 0007 7.5kW 0008 11.0kW<br>0009 15.0kW 000A 18.5kW 000B 22.0kW |
| 0x0002 | Inverter Input Voltage | | | R | 0: 220V class<br>1: 440V class |
| 0x0003 | S/W Version | | | R | (Ex) 0x0010: Version 1.0<br>0x0011: Version 1.1 |
| 0x0004 | Parameter Lock | | | R/W | 0: Lock (default)<br>1: Unlock |
| 0x0005 | Frequency Reference | 0.01 | Hz | R/W | Starting freq. ~ Max. freq. |
| 0x0006 | Run Command | | | R/W | BIT 0: Stop (0->1)<br>BIT 1: Forward run (0->1)<br>BIT 2: Reverse run (0->1) |
| | | | | W | BIT 3: Fault reset (0->1)<br>BIT 4: Emergency stop (0->1) |
| | | | | - | BIT 5, BIT 15: Not used |
| | | | | R | BIT 6~7: Output freq. arrival<br>0(Terminal), 1 (keypad)<br>2(Reserved), 3 (communication)<br>BIT 8~12: Freq. command<br>0 : DRV–00, 1: Not used,<br>2~8: Multi-Step frequency 1~7<br>9: Up, 10: Down, 11: UDZero, 12: V0, 13: V1,<br>14: I, 15: V0+I, 16: V1+I, 17: Jog, 18: PID,<br>19: Communication, 20 ~ 31: Reserved |
| 0x0007 | Acceleration Time | 0.1 | sec | R/W | See Function List. |
| 0x0008 | Deceleration Time | 0.1 | sec | R/W | |
| 0x0009 | Output Current | 0.1 | A | R | |
| 0x000A | Output Frequency | 0.01 | Hz | R | |
| 0x000B | Output Voltage | 0.1 | V | R | |

| Address | Parameter | Scale | Unit | R/W | Data value |
|---|---|---|---|---|---|
| 0x000C | DC Link voltage | 0.1 | V | R | See Function List. |
| 0x000D | Output power | 0.1 | kW | R | |
| 0x000E | Inverter status | | | R | BIT 0: Stop<br>BIT 1: Forward running<br>BIT 2: Reverse running<br>BIT 3: Fault (Trip)<br>BIT 4: Accelerating<br>BIT 5: Decelerating<br>BIT 6: speed arrival<br>BIT 7: DC Braking<br>BIT 8: Stopping<br>Bit 9: not Used<br>BIT10: Brake Open<br>BIT11: Forward run command<br>BIT12: Reverse run command<br>BIT13: REM. R/S<br>BIT14: REM. Freq. |
| 0x000F | Trip information | | | R | BIT 0: OCT<br>BIT 1: OVT<br>BIT 2: EXT-A<br>BIT 3: EST (BX)<br>BIT 4: COL<br>BIT 5: GFT (Ground Fault)<br>BIT 6: OHT (Inverter overheat)<br>BIT 7: ETH (Motor overheat)<br>BIT 8: OLT (Overload trip)<br>BIT 9: HW-Diag<br>BIT10: EXT-B<br>BIT11: EEP (Parameter Write Error)<br>BIT12: FAN (Lock & Open Error)<br>BIT13: PO (Phase Open)<br>BIT14: IOLT<br>BIT15: LVT |
| 0x0010 | Input terminal status | | | R | BIT 0: P1<br>BIT 1: P2<br>BIT 2: P3<br>BIT 3: P4 |

| Address | Parameter | Scale | Unit | R/W | Data value |
|---|---|---|---|---|---|
| 0x0010 | Input terminal status | | | | BIT 4: P5<br>BIT 5: P6<br>BIT 6: P7<br>BIT 7: P8 |
| 0x0011 | Output terminal status | | | R | BIT 0~3: Not Used<br>BIT 4: MO (Multi-Output with OC)<br>BIT 5~6: Not Used<br>BIT 7: 3ABC |
| 0x0012 | V1 | 0~3FF | | R | Value corresponding to 0V ~ +10V |
| 0x0013 | V2 | 0~3FF | | R | Value corresponding to 0V ~ -10V input when Setting FreqMode to 2 |
| 0x0014 | I | 0~3FF | | R | Value corresponding to 0 ~ 20mA input |
| 0x0015 | RPM | | | R | See Function List. |
| 0x001A | Unit display | | | R | Not Used |
| 0x001B | Pole number | | | R | Not Used |
| 0x001C | Custom Version | | | R | Not Used |
| 0x001D | Trip information-B | | | R | BIT 0: COM (I/O Board Reset)<br>BIT 1: FLTL<br>BIT 2: NTC<br>BIT 3: REEP<br>BIT 4: OC2<br>BIT 5: NBR<br>BIT 6 ~ 15: Not Used |
| 0x001E | PID Feedback | | Hz /% | W | Writes feedback amount when feedback is set by communication in PID drive. |
| 0x0100 ~ 0x0107 | Read address register | | | R | 0x0100: 166 0x0101: 167<br>0x0102: 168 0x0103: 169<br>0x0104: 170 0x0105: 171<br>0x0106: 172 0x0107: 173 |
| 0x0108 ~ 0x010F | Write address register | | | W | 0x0108: 174 0x0109: 175<br>0x010A: 176 0x010B: 177<br>0x010C: 178 0x010D: 179<br>0x010E: 180 0x010F: 181 |

Note 1) The changed value in Common area affects the current setting but returns to the previous setting when power is cycled or Inverter is reset. However, changing value is immediately reflected in other parameter groups even in the case of Reset or Power On/Off.
Note 2) S/W version of Common area is displayed in 16 bit, while that of parameter area is displayed in 10 bit.

## 11.8 Troubleshooting

Refer to Troubleshooting when RS-485 communication error occurs.

| Check points | Corrective measures |
|---|---|
| Is the power provided to the converter? | Provide electric power to the converter. |
| Are the connections between converter and computer correct? | Refer to converter manual. |
| Is Master not polling? | Verify the master is polling the inverter. |
| Is baud rate of computer and inverter correctly set? | Set the correct value in accordance with“11.3 Installation”. |
| Is the data format of user program* right? | Revise User Program (Note1). |
| Is the connection between converter and communication card right? | Check for GF the correct wiring in accordance with“11.3 Installation”. |

(Note 1) User program is User-made S/W for PC.

## 11.9 Miscellaneous

ASCII Code List

| Character | Hex | Character | Hex | Character | Hex | Character | Hex | Character | Hex |
|---|---|---|---|---|---|---|---|---|---|
| A | 41 | a | 61 | 0 | 30 | : | 3A | DLE | 10 |
| B | 42 | b | 62 | 1 | 31 | ; | 3B | EM | 19 |
| C | 43 | c | 63 | 2 | 32 | < | 3C | ACK | 06 |
| D | 44 | d | 64 | 3 | 33 | = | 3D | ENQ | 05 |
| E | 45 | e | 65 | 4 | 34 | > | 3E | EOT | 04 |
| F | 46 | f | 66 | 5 | 35 | ? | 3F | ESC | 1B |
| G | 47 | g | 67 | 6 | 36 | @ | 40 | ETB | 17 |
| H | 48 | h | 68 | 7 | 37 | [ | 5B | ETX | 03 |
| I | 49 | i | 69 | 8 | 38 | \ | 5C | FF | 0C |
| J | 4A | J | 6A | 9 | 39 | ] | 5D | FS | 1C |
| K | 4B | k | 6B | space | 20 | | 5E | GS | 1D |
| L | 4C | l | 6C | ! | 21 | | 5F | HT | 09 |
| M | 4D | m | 6D | " | 22 | | 60 | LF | 0A |
| N | 4E | n | 6E | # | 23 | { | 7B | NAK | 15 |
| O | 4F | o | 6F | $ | 24 | \| | 7C | NUL | 00 |
| P | 50 | p | 70 | % | 25 | } | 7D | RS | 1E |
| Q | 51 | q | 71 | & | 26 | ~ | 7E | S1 | 0F |
| R | 52 | r | 72 | ' | 27 | BEL | 07 | SO | 0E |
| S | 53 | s | 73 | ( | 28 | BS | 08 | SOH | 01 |
| T | 54 | t | 74 | ) | 29 | CAN | 18 | STX | 02 |
| U | 55 | u | 75 | * | 2A | CR | 0D | SUB | 1A |
| V | 56 | v | 76 | + | 2B | DC1 | 11 | SYN | 16 |
| W | 57 | w | 77 | , | 2C | DC2 | 12 | US | 1F |
| X | 58 | x | 78 | - | 2D | DC3 | 13 | VT | 0B |
| Y | 59 | y | 79 | . | 2E | DC4 | 14 | | |
| Z | 5A | z | 7A | / | 2F | DEL | 7F | | |

# CHAPTER 12 - TROUBLESHOOTING & MAINTENANCE

## 12.1 Protective functions.

**⚠ WARNING**

**When a fault occurs, the cause must be corrected before the fault can be cleared. If protective function keeps active, it could lead to reduction in product life and damage to the equipment.**

- Fault Display and information

| Keypad display | Protective functions | Descriptions |
|---|---|---|
| OCt | Overcurrent | The inverter turns off its output when the output current of the inverter flows more than the inverter rated current. |
| OC2 | Overcurrent2 | When IGBT's Arm is short and output short occurs, the inverter turns off its output |
| GFt | Ground fault current | The inverter turns off its output when a ground fault occurs and the ground fault current is more than the internal setting value of the inverter. |
| IOL | Inverter Overload | The inverter turns off its output when the output current of the inverter flows more than the rated level (150% for 1 minute). |
| OLt | Overload trip | The inverter turns off its output if the output current of the inverter flows at 150% of the inverter rated current for more than the current limit time (1 min). |
| OHt | Inverter overheat | The inverter turns off its output if the heat sink overheats due to a damaged cooling fan or an alien substance in the cooling fan by detecting the temperature of the heat sink. |
| POt | Output Phase loss | The inverter turns off its output when the one or more of the output (U, V, W) phase is open. The inverter detects the output current to check the phase loss of the output. |
| Out | Over voltage | The inverter turns off its output if the DC voltage of the main circuit increases higher than 400 V when the motor decelerates. This fault can also occur due to a surge voltage generated at the power supply system. |
| Lut | Low voltage | The inverter turns off its output if the DC voltage is below 180V because insufficient torque or overheating of the motor can occur when the input voltage of the inverter drops. |
| EtH | Electronic Thermal | The internal electronic thermal of the inverter determines the overheating of the motor. If the motor is overloaded the inverter turns off the output. The inverter cannot protect the motor when driving a motor having more than 4 poles or multi motors. |
| COL | Input phase loss | Inverter output is blocked when one of R, S, T is open or the electrolytic capacitor needs to be replaced. |

- Fault Display and Information

| Keypad display | Protective functions | Descriptions |
|---|---|---|
| FLtL | Self-diagnostic malfunction | Displayed when IGBT damage, output phase short, output phase ground fault or output phase open occurs. |
| EEP | Parameter save error | Displayed when user-setting parameters fails to be entered into memory. |
| HWt | Inverter hardware fault | Displayed when an error occurs in the control circuitry of the inverter. |
| Err | Communication Error | Displayed when the inverter cannot communicate with the keypad. |
| rErr | Remote keypad communication error | Displayed when inverter and remote keypad does not communicate each other. It does not stop Inverter operation. |
| COn | Keypad error | Displayed after Inverter resets keypad when keypad error occurs and this status is maintained for a certain time. |
| FAn | Cooling fan fault | Displayed when a fault condition occurs in the inverter cooling fan. |
| EST | Instant cut off | Used for the emergency stop of the inverter. The inverter instantly turns off the output when the EST terminal is turned on.<br>⚠ **Caution**<br>The inverter starts to regular operation when turning off the EST terminal while FX or RX terminal is ON. |
| EtA | External fault A contact input | When multi-function input terminal (I17-I24) is set to 18 {External fault signal input: A (Normal Open Contact)}, the inverter turns off the output. |
| Etb | External fault B contact input | When multi-function input terminal (I17-I24) is set to 19 {External fault signal input: B (Normal Close Contact)}, the inverter turns off the output. |
| _ _ L | Operating method when the frequency command is lost | When inverter operation is set via Analog input (0-10V or 0-20mA input) or option (RS485) and no signal is applied, operation is done according to the method set in I62 (Operating method when the frequency reference is lost). |
| ntC | NTC open | When NTC is not connected, outputs are cut off. |
| nbr | Brake control error | When Break control, if rating current flows below than set value, cut off the output without break open. |

## 12.2 Fault remedy

| Keypad display | Cause | Remedy |
|---|---|---|
| OCt<br>Overcurrent | ⚠ Caution | |
| | When an overcurrent fault occurs, operation must be started after the cause is removed to avoid damage to IGBT inside the inverter. | |
| | Accel/Decel time is too short compared to the $GD^2$ of the load.<br>Load is greater than the inverter rating.<br>Inverter output is issued when the motor is free running.<br>Output short circuit or ground fault has occurred.<br>Mechanical brake of the motor is operating too fast. | ☞ Increase the Accel/Decel time.<br>☞ Replace the inverter with appropriate capacity.<br>☞ Resume operation after stopping the motor or use H22 (Speed search).<br>☞ Check output wiring.<br>☞ Check the mechanical brake. |
| OC2<br>Overcurrent2 | Short occurs between up and down of IGBT<br>Inverter output short occurs.<br>Accel/Decel time is very fast comparing with $GD^2$ | ☞ Check the IGBT.<br>☞ Check output Wring.<br>☞ Increase the Accel/Decel time. |
| GFt<br>Ground fault current | Ground fault has occurred at the output wiring of the inverter<br>The insulation of the motor is damaged due to heat | ☞ Check the wiring of the output terminal.<br>☞ Replace the motor. |
| IOL<br>Inverter overload<br>OLt<br>Overload trip | Load is greater than the inverter rating.<br>Torque boost scale is set too large. | ☞ Upgrade the capacity of motor and inverter or reduce the load weight.<br>☞ Reduce torque boost scale. |
| OHt<br>Inverter overheat | Cooling system has faults.<br>An old cooling fan is not replaced with a new one.<br>Ambient temperature is too high. | ☞ Check for alien substances clogged in the heat sink.<br>☞ Replace the old cooling fan with a new one.<br>☞ Keep ambient temperature under 50°C. |
| POt<br>Output Phase loss | Faulty contact of magnetic switch at output<br>Faulty output wiring | ☞ Make connection of magnetic switch at output of the inverter securely.<br>☞ Check output wiring. |
| FAn<br>Cooling fan fault | An alien substance is clogged in a ventilating slot.<br>Inverter has been in use without changing a cooling fan. | ☞ Check the ventilating slot and remove the clogged substances.<br>☞ Replace the cooling fan. |

- Fault remedy

| Keypad display | Cause | Remedy |
|---|---|---|
| Out<br>Over voltage | Decel time is too short compared to the $GD^2$ of the load.<br>Regenerative load is at the inverter output.<br>Line voltage is too high. | ☞ Increase the Decel time.<br><br>☞ Use Dynamic Brake Unit.<br>☞ Check whether line voltage exceeds its rating. |
| Lut<br>Low voltage | Line voltage is low.<br>Load larger than line capacity is connected to line (ex: welding machine, motor with high starting current connected to the commercial line).<br>Faulty magnetic switch at the input side of the inverter. | ☞ Check whether line voltage is below its rating.<br>☞ Check the incoming AC line. Adjust the line capacity corresponding to the load.<br><br>☞ Change a magnetic switch. |
| EtH<br>Electronic thermal | Motor has overheated.<br><br>Load is greater than inverter rating.<br>ETH level is set too low.<br><br>Inverter capacity is incorrectly selected.<br>Inverter has been operated at low speed for too long. | ☞ Reduce load weight and operating duty.<br>☞ Change inverter with higher capacity.<br>☞ Adjust ETH level to an appropriate level.<br>☞ Select correct inverter capacity.<br>☞ Install a cooling fan with a separate power supply. |
| EtA<br>External fault A contact input | The terminal set to “18 (External fault-A)” or “19 (External fault-B)” in I20-I24 in I/O group is ON. | ☞ Eliminate the cause of fault at circuit connected to external fault terminal or cause of external fault input. |
| Etb<br>External fault B contact input | | |
| _ _ l<br>Operating method when the frequency command is lost | No frequency command is applied to V1 and I. | ☞ Check the wiring of V1 and I and frequency reference level. |
| rErr<br>Remote keypad communication error | Communication error between inverter keypad and remote keypad | ☞ Check for connection of communication line and connector. |
| nbr<br>Brake control error | Break open current is not flow any more. | ☞Check the Motor Capacity & Wiring |

- Fault remedy

| Protective functions & cause | Descriptions |
|---|---|
| EEP HWT Err COM ntC<br>EEP : Parameter save error<br>HWT : Hardware fault<br>Err : Communication error<br>COM : Keypad error<br>NTC : NTC error | ☞ Contact your local LSIS sales representative. |

☞ **Overload Protection**

IOLT : IOLT(inverter Overload Trip) protection is activated at 150% of the inverter rated current for 1 minute and greater.

OLT : OLT is selected when F56 is set to 1 and activated at 200% of F57[Motor rated current] for 60 sec in F58. This can be programmable.

**iG5A is not provided with "Overspeed Protection."**

## 12.3 Precautions for maintenance and inspection

**⚠ WARNING**

Make sure to remove the input power while performing maintenance.
Make sure to perform maintenance after checking the DC link capacitor has discharged. The bus capacitors in the inverter main circuit can still be charged even after the power is turned off. Check the voltage between terminal P or P1 and N using a tester before proceeding.
SV-iG5A series inverter has ESD (Electrostatic Discharge) sensitive components. Take protective measures against ESD before touching them for inspection or installation.
Do not change any inner parts and connectors. Never modify the inverter.

## 12.4Check points

- Daily inspections
  - ✓ Proper installation environment
  - ✓ Cooling system fault
  - ✓ Unusual vibration and noise
  - ✓ Unusual overheating and discoloration

- Periodic inspection
  - ✓ Screws and bolts may become loose due to vibration, temperature changes, etc.
  - ✓ Check that they are tightened securely and retighten as necessary.
  - ✓ Alien substances are clogged in the cooling system.
  - ✓ Clean it using the air.
  - ✓ Check the rotating condition of the cooling fan, the condition of capacitors and the connections with the magnetic contactor.
  - ✓ Replace them if there are any abnormalities.

## 12.5 Part replacements

The inverter consists of many electronic parts such as semiconductor devices. The following parts may deteriorate with age because of their structures or physical characteristics, leading to reduced performance or failure of the inverter. For preventive maintenance, the parts must be changed periodically. The parts replacement guidelines are indicated in the following table. Lamps and other short-life parts must also be changed during periodic inspection.

| Part name | Change period (unit: Year) | Description |
|---|---|---|
| Cooling fan | 3 | Exchange (as required) |
| DC link capacitor in main circuit | 4 | Exchange (as required) |
| Electrolytic capacitor on control board | 4 | Exchange (as required) |
| Relays | - | Exchange (as required) |

# CHAPTER 13 - SPECIFICATIONS

## 13.1 Technical data

- Input & output ratings: Single Phase 200V Class

| SV ■■■iG5A –1 ■■ | | | 004 | 008 | 015 |
|---|---|---|---|---|---|
| Max capacity[1] | | [HP] | 0.5 | 1 | 2 |
| | | [kW] | 0.4 | 0.75 | 1.5 |
| Output ratings | Capacity [kVA] [2] | | 0.95 | 1.9 | 3.0 |
| | FLA [A] [3] | | 2.5 | 5 | 8 |
| | Max Frequency | | 400 [Hz] [4] | | |
| | Max Voltage | | 3Φ 200 ~ 230V [5] | | |
| Input ratings | Rated Voltage | | 1Φ 200 ~ 230 VAC (+10%, -15%) | | |
| | Rated Frequency | | 50 ~ 60 [Hz] (±5%) | | |
| Cooling method | | | Forced cooling | | |
| Weight [kg] | | | 0.77 | 1.12 | 1.84 |

- 
- Input & output ratings: Three Phase 200V Class

| SV ■■■iG5A –2 ■■ | | | 004 | 008 | 015 | 022 | 037 | 040 | 055 | 075 | 110 | 150 | 185 | 220 |
|---|---|---|---|---|---|---|---|---|---|---|---|---|---|---|
| Max capacity[1] | | [HP] | 0.5 | 1 | 2 | 3 | 5 | 5.4 | 7.5 | 10 | 15 | 20 | 25 | 30 |
| | | [kW] | 0.4 | 0.75 | 1.5 | 2.2 | 3.7 | 4.0 | 5.5 | 7.5 | 11 | 15 | 18.5 | 22 |
| Output ratings | Capacity [kVA] [2] | | 0.95 | 1.9 | 3.0 | 4.5 | 6.1 | 6.5 | 9.1 | 12.2 | 17.5 | 22.9 | 28.2 | 33.5 |
| | FLA [A] [3] | | 2.5 | 5 | 8 | 12 | 16 | 17 | 24 | 32 | 46 | 60 | 74 | 88 |
| | Max Frequency | | 400 [Hz] [4] | | | | | | | | | | | |
| | Max Voltage | | 3Φ 200 ~ 230V [5] | | | | | | | | | | | |
| Input ratings | Rated Voltage | | 3Φ 200 ~ 230 VAC (+10%, -15%) | | | | | | | | | | | |
| | Rated Frequency | | 50 ~ 60 [Hz] (±5%) | | | | | | | | | | | |
| Cooling method | | | N/C[6] | | | | | Forced cooling | | | | | | |
| Weight [kg] | | | 0.76 | 0.77 | 1.12 | 1.84 | 1.89 | 1.89 | 3.66 | 3.66 | 9.0 | 9.0 | 13.3 | 13.3 |

1) Indicates the maximum applicable motor capacity when using a 4-pole standard motor.
2) Rated capacity is based on 220V for 200V class and 440V for 400V class.
3) Refer to 13-4 when Carrier frequency setting (H39) is above 3kHz.
4) Max frequency setting range is extended to 300Hz when H40 (Control mode select) is set to 3 (Sensorless vector control).
5) Maximum output voltage cannot be higher than the input voltage. It can be programmable below input voltage.
6) N/C: Natural Convention

- Input & output ratings: Three Phase 400V Class

| SV ■■■ iG5A – 4 ■■ | | 004 | 008 | 015 | 022 | 037 | 040 | 055 | 075 | 110 | 150 | 185 | 220 |
|---|---|---|---|---|---|---|---|---|---|---|---|---|---|
| Max capacity | [HP] | 0.5 | 1 | 2 | 3 | 5 | 5.4 | 7.5 | 10 | 15 | 20 | 25 | 30 |
| | [kW] | 0.4 | 0.75 | 1.5 | 2.2 | 3.7 | 4.0 | 5.5 | 7.5 | 11 | 15 | 18.5 | 22 |
| Output ratings | Capacity [kVA] [2] | 0.95 | 1.9 | 3.0 | 4.5 | 6.1 | 6.9 | 9.1 | 12.2 | 18.3 | 22.9 | 29.7 | 34.3 |
| | FLA [A] [3] | 1.25 | 2.5 | 4 | 6 | 8 | 9 | 12 | 16 | 24 | 30 | 39 | 45 |
| | Max Frequency | 400 [Hz] [4] | | | | | | | | | | | |
| | Max Voltage | 3Φ 380 ~ 480V [5] | | | | | | | | | | | |
| Input ratings | Rated Voltage | 3Φ 380 ~ 480 VAC (+10%, -15%) | | | | | | | | | | | |
| | Rated Frequency | 50 ~ 60 [Hz] (±5%) | | | | | | | | | | | |
| Cooling method | | N/C | Forced cooling | | | | | | | | | | |
| Weight [kg] | | 0.76 | 0.77 | 1.12 | 1.84 | 1.89 | 1.89 | 3.66 | 3.66 | 9.0 | 9.0 | 13.3 | 13.3 |

1) Indicates the maximum applicable motor capacity when using a 4-pole standard motor.
2) Rated capacity is based on 220V for 200V class and 440V for 400V class.
3) Refer to 13-4 when Carrier frequency setting (H39) is above 3kHz.
4) Max frequency setting range is extended to 300Hz when H40 (Control mode select) is set to 3 (Sensorless vector control).
5) Maximum output voltage cannot be higher than the input voltage. It can be programmable below input voltage.
6) N/C: Natural Convention

- Control

| | | |
|---|---|---|
| Control method | | V/F, Sensorless vector control |
| Frequency setting resolution | | Digital command: 0.01Hz<br>Analog command: 0.06Hz (Max freq.: 60Hz) |
| Frequency accuracy | | Digital command: 0.01% of Max output frequency<br>Analog command: 0.1% of Max output frequency |
| V/F pattern | | Linear, Squared, User V/F |
| Overload capacity | | 150% per 1 min. |
| Torque boost | | Manual/Auto torque boost |
| Dynamic Braking | Max braking torque | 20% [1)] |
| | Time/%ED | 150% [2)] when using optional DB resistor |

1) Means average braking torque during Decel to stop of a motor.
2) Refer to page 13-8 for DB resistor specification.

- Operation

| | | | |
|---|---|---|---|
| Operation mode | | Keypad/ Terminal/ Communication option/ Remote keypad selectable | |
| Frequency setting | | Analog: 0 ~ 10[V], -10 ~ 10[V], 0 ~ 20[mA]<br>Digital: Keypad | |
| Operation features | | PID, Up-down, 3-wire | |
| Input | Multi-function terminal P1 ~ P8 | NPN / PNP selectable (See page 2-13) | |
| | | FWD/REV RUN, Emergency stop, Fault reset, Jog operation, Multi-step Frequency-High, Mid, Low, Multi-step Accel/Decel-High, Mid, Low, DC braking at stop, 2nd motor select, Frequency UP/Down, 3-wire operation, External trip A, B, PID-Inverter (v/f) operation bypass, Option-inverter (v/f) operation bypass, 2nd Source, Analog Hold, Accel/Decel stop, Up/Down Save Freq, Jog FX/RX | |
| Output | Open collector terminal | Fault output and inverter status output | Less than DC 24V 50mA |
| | Multi-function relay | | (N.O., N.C.) Less than AC250V 1A, Less than DC 30V 1A |
| | Analog output | 0 ~ 10 Vdc (less than10mA): Output Freq, Output Current, Output Voltage, DC link selectable | |

- Protective function

| | |
|---|---|
| Trip | Over Voltage, Under Voltage, Over Current, Over Current 2, Ground Fault current detection, Inverter Overheat, Motor Overheat, Output Phase Open, Overload Protection, Communication Error, Loss of Speed Command, Hardware Fault, Fan trip, Brake error. |
| Alarm | Stall prevention, overload |
| Momentary Power Loss[1)] | Below 15 msec: Continuous operation (should be within rated input voltage, rated output power.)<br>Above 15 msec: Auto restart enable |

1) Single Phase products: Continuous operation (should be within rated input voltage, rated output power)

- Environment

| | |
|---|---|
| Protection degree | IP 20, UL TYPE1 |
| Ambient temp | -10°C ~ 50°C |
| Storage temp | -20°C ~ 65°C |
| Humidity | Below 90% RH (no condensation) |
| Altitude/Vibration | Below 1,000m, 5.9m/sec$^2$ (0.6G) |
| Atmospheric pressure | 70~106 kPa |
| Location | Protected from corrosive gas, combustible gas, oil mist or dust |

## 13.2 Temperature Derating Information

- Load and ambient temperature classified by the Carrier Frequency

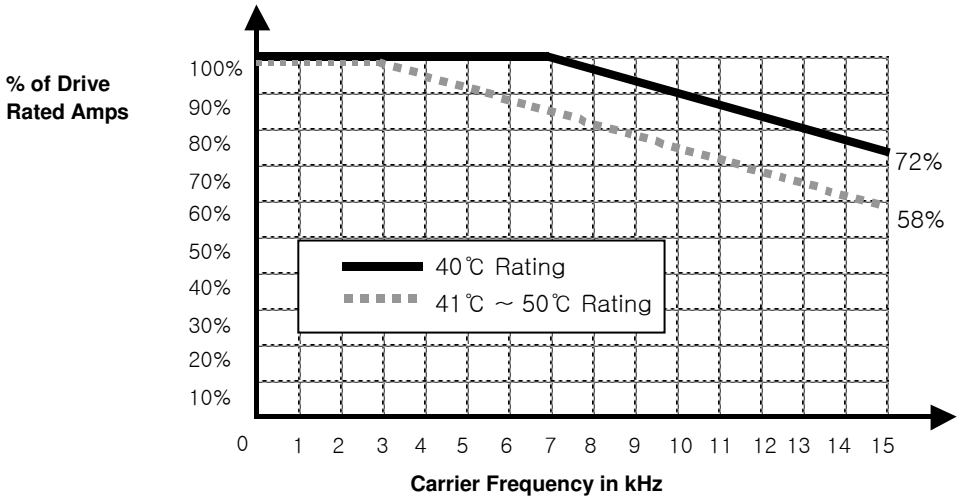


| ⚠Caution |
|---|
| 1) The above graph is only applied when the inverter is operated in the allowable temperature. Pay attention to the air cooling when the inverter is installed in a panel box, and the inside temperature should be within an allowable temperature range.<br>2) This derating curve is based on inverter current rating when rated motor is connected. |

## 13.3 Remote option

- Parts

1) Remote Keypad

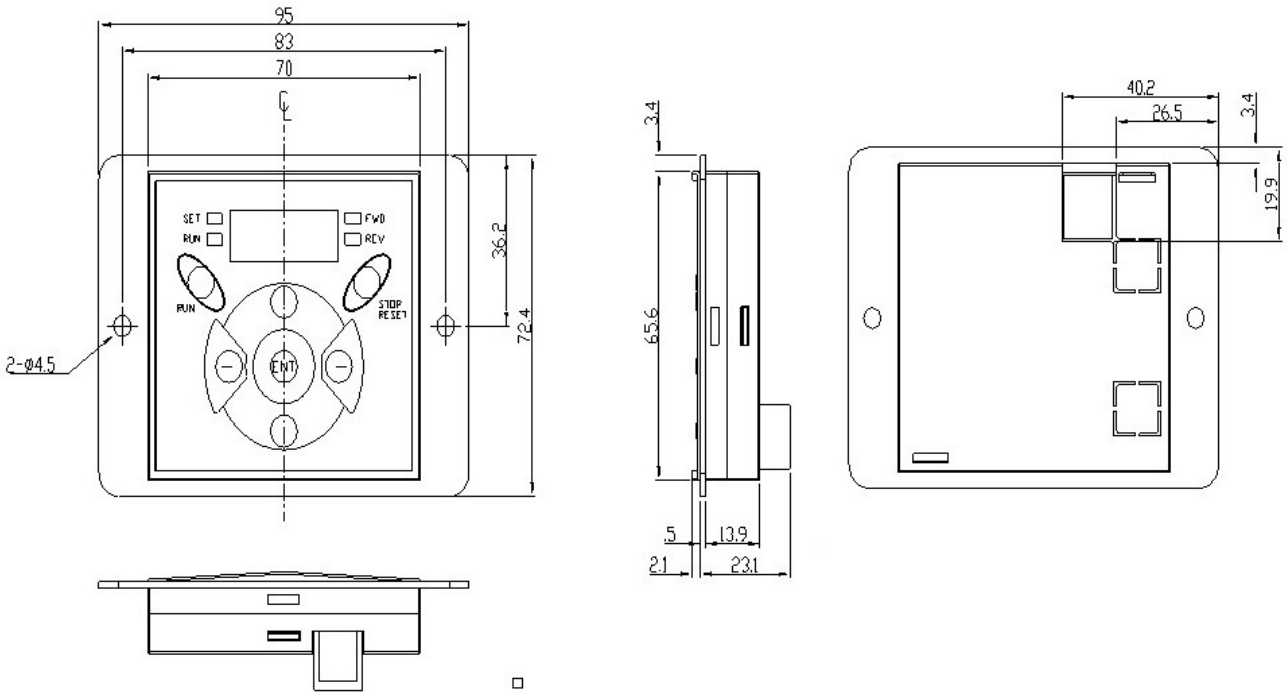

2) Remote Cable (2M,3M,5M)

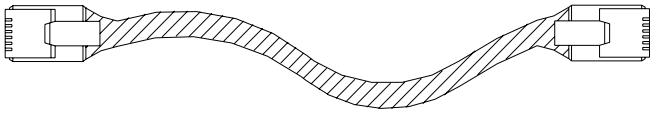

- Remote Cable Model Number

| Model number | Specification |
|---|---|
| 64100001 | INV, REMOTE 2M (SV-iG5A) |
| 64100002 | INV, REMOTE 3M (SV-iG5A) |
| 64100003 | INV, REMOTE 5M (SV-iG5A) |

- Installation

1) Take off the top cover of the I/O board kit and remove the hole cover to connect remote cable on the side.

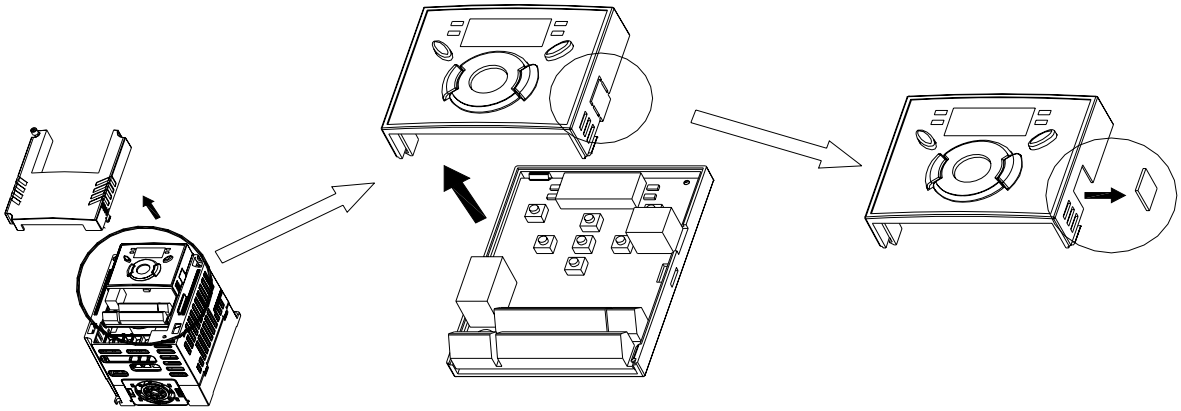

2) Attach the top cover of the I/O board kit and connect the remote cable as shown below.

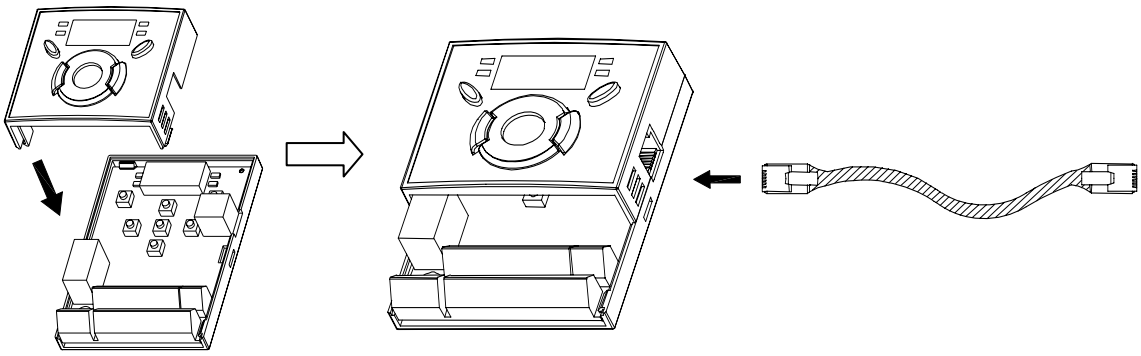

3) Connect the other side of the remote cable to the remote keypad as shown below.

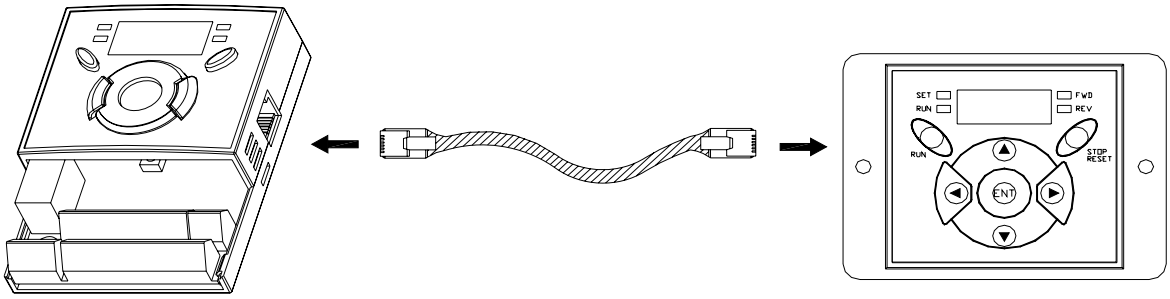


| ⚠ CAUTION |
|---|
| ● Without Parameter Read(H91), Parameter Write(H92) is not available since the Remote memory is empty when the Remote keypad is first used.<br>● Do not use the remote cable other than standard LS'. Otherwise, malfunction may occur due to noise input or voltage drop in the keypad.<br>● Check for disconnection of the communication cable and/or poor cable connection if "----" is displayed on the 7-segment display of the Remote keypad.<br>● When Parameter Read(H91) is executed, "rd"(Read) and "wr"(Verifiy) is displayed successively on the 7-segment display of the Remote keypad. On the other hand, when Parameter Write(H92) is executed, "wr"(Write) is displayed only. |

## 13.4 Conduit Kit

● Installation

1) SV004IG5A-1, SV008IG5A-1, SV015IG5A-1, SV004IG5A-2, SV008IG5A-2, SV015IG5A-2, SV022IG5A-2, SV037IG5A-2, SV040IG5A-2, SV004IG5A-4, SV008IG5A-4, SV015IG5A-4, SV022IG5A-4, SV037IG5A-4, SV040IG5A-4

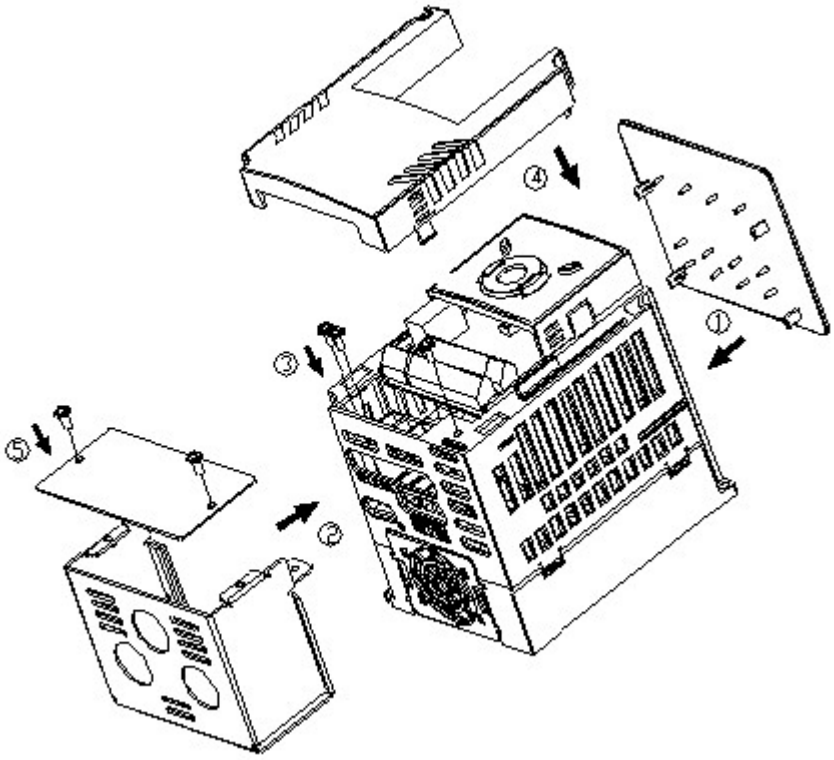

2) SV055IG5A-2, SV055IG5A-4, SV075IG5A-2, SV075IG5A-4

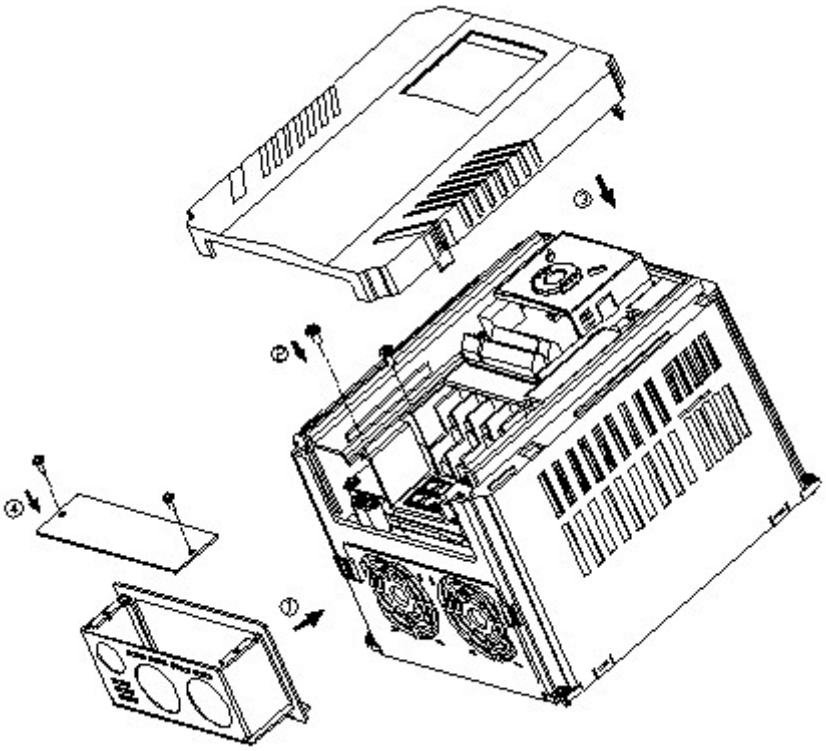

3) SV110IG5A-2, SV110IG5A-4, SV150IG5A-2, SV150IG5A-4, SV185IG5A-2, SV185IG5A-4, SV220IG5A-2, SV220IG5A-4

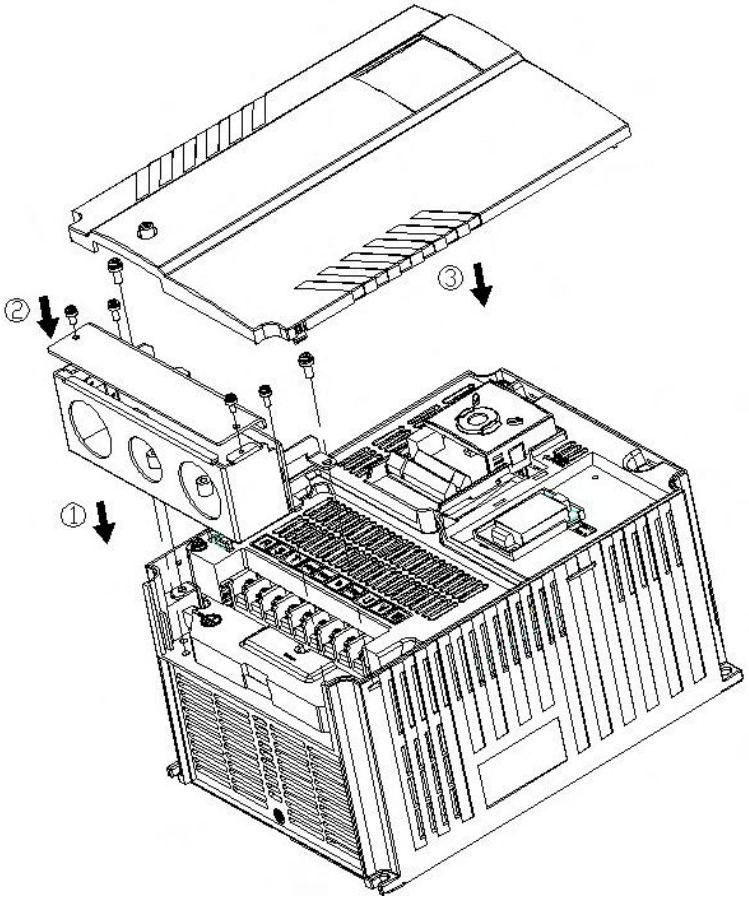

● Conduit Kit

| Conduit Kit | Model |
|---|---|
| Inverter Conduit Kit 1 | SV004IG5A-2/4, SV008IG5A-2/4 |
| Inverter Conduit Kit 2 | SV015IG5A-2/4 |
| Inverter Conduit Kit 3 | SV022IG5A-2/4, SV037IG5A-2/4, SV040IG5A-2/4 |
| Inverter Conduit Kit 4 | SV055IG5A-2/4, SV075IG5A-2/4 |
| Inverter Conduit Kit 5 | SV110IG5A-2/4, SV150IG5A-2/4 |
| Inverter Conduit Kit 6 | SV185IG5A-2/4, SV220IG5A-2/4 |

## 13.5 EMC filter

(Reserved)

## 13.6 Braking resistor

| Input Voltage | Inverter capacity [kW] | 100 % braking | | 150% braking | |
|---|---|---|---|---|---|
| | | [Ω] | [W]* | [Ω] | [W]* |
| 200V | 0.4 | 400 | 50 | 300 | 100 |
| | 0.75 | 200 | 100 | 150 | 150 |
| | 1.5 | 100 | 200 | 60 | 300 |
| | 2.2 | 60 | 300 | 50 | 400 |
| | 3.7 | 40 | 500 | 33 | 600 |
| | 5.5 | 30 | 700 | 20 | 800 |
| | 7.5 | 20 | 1000 | 15 | 1200 |
| | 11.0 | 15 | 1400 | 10 | 2400 |
| | 15.0 | 11 | 2000 | 8 | 2400 |
| | 18.5 | 9 | 2400 | 5 | 3600 |
| | 22.0 | 8 | 2800 | 5 | 3600 |
| 400V | 0.4 | 1800 | 50 | 1200 | 100 |
| | 0.75 | 900 | 100 | 600 | 150 |
| | 1.5 | 450 | 200 | 300 | 300 |
| | 2.2 | 300 | 300 | 200 | 400 |
| | 3.7 | 200 | 500 | 130 | 600 |
| | 5.5 | 120 | 700 | 85 | 1000 |
| | 7.5 | 90 | 1000 | 60 | 1200 |
| | 11.0 | 60 | 1400 | 40 | 2000 |
| | 15.0 | 45 | 2000 | 30 | 2400 |
| | 18.5 | 35 | 2400 | 20 | 3600 |
| | 22.0 | 30 | 2800 | 10 | 3600 |

* The wattage is based on Enable duty (%ED) 5% with continuous braking time 15 sec.

# DECLARATION OF CONFORMITY

Council Directive(s) to which conformity is declared:

**CD 73/23/EEC and CD 89/336/EEC**

Units are certified for compliance with:

**EN 61800-3/A11 (2000)**
**EN 61000-4-2/A2 (2001)**
**EN 61000-4-3/A2 (2001)**
**EN 61000-4-4/A2 (2001)**
**EN 61000-4-5/A1 (2001)**
**EN 61000-4-6/A1 (2001)**
**EN 55011/A2 (2002)**
**EN 50178 (1997)**
**IEC/TR 61000-2-1 (1990)**
**EN 61000-2-2 (2002)**

Type of Equipment: **Inverter (Power Conversion Equipment)**

Model Name: **SV - iG5A Series**

Trade Mark: **LS Industrial Systems Co., Ltd.**

Representative: **LS Industrial Systems Co., Ltd.**
Address: **LS Tower, Hogye-dong, Dongan-gu, Anyang-si, Gyeonggi-do 1026-6, Korea**

Manufacturer: **LS Industrial Systems Co., Ltd.**
Address: **181, Samsung-ri, Mokchon-Eup, Chonan, Chungnam, 330-845, Korea**

**We, the undersigned, hereby declare that equipment specified above conforms to the Directives and Standards mentioned.**

Place: **Chonan, Chungnam, Korea**

11/08/2008 (Signature/Date)

**Mr. Dok Ko Yong Chul / Factory Manager**
(Full name / Position)

## TECHNICAL STANDARDS APPLIED

The standards applied in order to comply with the essential requirements of the Directives 73/23/CEE "Electrical material intended to be used with certain limits of voltage" and 89/336/CEE "Electromagnetic Compatibility" are the following ones:

| | |
|---|---|
| **• EN 50178 (1997)** | **“Electronic equipment for use in power installations”.** |
| **• EN 61800-3/A11 (2000)** | **“Adjustable speed electrical power drive systems. Part 3: EMC product standard including specific methods”** |
| **• EN 55011/A2 (2002)** | **“Industrial, scientific and medical (ISM) radio-frequency equipment. Radio disturbances characteristics. Limits and methods of measurement”** |
| **• EN 61000-4-2/A2 (2001)** | **“Electromagnetic compatibility (EMC). Part 4: Testing and measurement techniques. Section 2: Electrostatic discharge immunity test.** |
| **• EN 61000-4-3/A2 (2001)** | **“Electromagnetic compatibility (EMC). Part 4: Testing and measurement techniques. Section 3: Radiated, radiofrequency, electromagnetic field immunity test.** |
| **• EN 61000-4-4/A2 (2001)** | **“Electromagnetic compatibility (EMC). Part 4: Testing and measurement techniques. Section 4: Electrical fast transients / burst immunity test.** |
| **• EN 61000-4-5/A1 (2000)** | **“Electromagnetic compatibility (EMC). Part 4: Testing and measurement techniques. Section 5: Surge immunity test.** |
| **• EN 61000-4-6/A1 (2001)** | **“Electromagnetic compatibility (EMC). Part 4: Testing and measurement techniques. Section 6: Immunity to conducted disturbances, induced by radio-frequency fields.** |
| **• CEI/TR 61000-2-1 (1990)** | **“Electromagnetic compatibility (EMC). Part 2: Environment. Environment description for low-frequency conducted disturbances and signaling in public low voltages supply systems”** |
| **• EN 61000-2-2 (2002)** | **“Electromagnetic compatibility (EMC). Part 2: Environment. Compatibility level for low-frequency conducted disturbances and signaling in public low voltages supply systems”** |

**EMI / RFI POWER LINE FILTERS**

**LS inverters, iG5A series**

## RFI FILTERS

THE LS RANGE OF POWER LINE FILTERS **FF ( Footprint ) - FE ( Standard ) SERIES**, HAVE BEEN SPECIFICALLY DESIGNED WITH HIGH FREQUENCY **LS INVERTERS**. THE USE OF LS FILTERS, WITH THE INSTALLATION ADVICE OVERLEAF HELP TO ENSURE TROUBLE FREE USE ALONG SIDE SENSITIVE DEVICES AND COMPLIANCE TO CONDUCTED EMISSION AND IMMUNITY STANDARDS **TO EN 50081 -> EN61000-6-3:02 and EN61000-6-1:02**

## CAUTION

IN CASE OF A LEAKAGE CURRENT PROTECTIVE DEVICES IS USED ON POWER SUPPLY, IT MAY BE FAULT AT POWER-ON OR OFF. IN AVOID THIS CASE, THE SENSE CURRENT OF PROTECTIVE DEVICE SHOULD BE LARGER THAN VALUE OF LEAKAGE CURRENT AT WORST CASE IN THE BELOW TABLE.

### RECOMMENDED INSTALLATION INSTRUCTIONS

**To conform to the EMC directive, it is necessary that these instructions be followed as closely as possible. Follow the usual safety procedures when working with electrical equipment. All electrical connections to the filter, inverter and motor must be made by a qualified electrical technician.**

1-) Check the filter rating label to ensure that the current, voltage rating and part number are correct.

2-) For best results the filter should be fitted as closely as possible to the incoming mains supply of the wiring enclousure, usually directly after the enclousures circuit breaker or supply switch.

3-) The back panel of the wiring cabinet of board should be prepared for the mounting dimensions of the filter. Care should be taken to remove any paint etc... from the mounting holes and face area of the panel to ensure the best possible earthing of the filter.

4-) Mount the filter securely.

5-) Connect the mains supply to the filter terminals marked LINE, connect any earth cables to the earth stud provided. Connect the filter terminals marked LOAD to the mains input of the inverter using short lengths of appropriate gauge cable.

6-) Connect the motor and fit the ferrite core ( output chokes ) as close to the inverter as possible. Armoured or screened cable should be used with the 3 phase conductors only threaded twice through the center of the ferrite core. The earth conductor should be securely earthed at both inverter and motor ends. The screen should be connected to the enclosure body via and earthed cable gland.

7-) Connect any control cables as instructed in the inverter instructions manual.

***IT IS IMPORTANT THAT ALL LEAD LENGHTS ARE KEPT AS SHORT AS POSSIBLE AND THAT INCOMING MAINS AND OUTGOING MOTOR CABLES ARE KEPT WELL SEPARATED.***

**FF SERIES ( Footprint )**

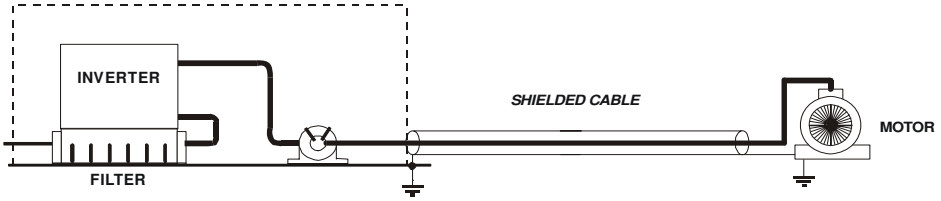


**FE SERIES ( Standard )**

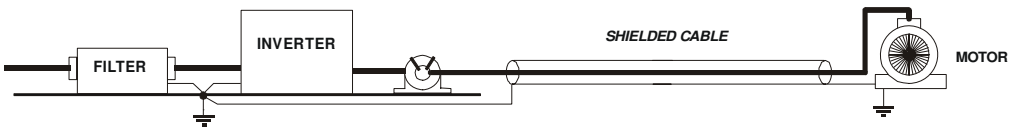

## EMI / RFI POWER LINE FILTERS
## LS inverters, iG5A series

| iG5A series / Footprint Filters | | | | | | | | | | | |
|---|---|---|---|---|---|---|---|---|---|---|---|
| INVERTER | POWER | CODE | CURRENT | VOLTAGE | LEAKAGE CURRENT | DIMENSIONS L W H | MOUNTING Y X | WEIGHT | MOUNT | FIG. | OUTPUT CHOKES |
| SINGLE PHASE | | | | | (MAX.) | | | | | | |
| SV004iG5A-1 | 0.4kW | FFG5A-M005-(x) | 5A | 250VAC | 3.5mA | 175x76.5x40 | 161x53 | 1.2Kg. | M4 | A | FS – 1 |
| SV008iG5A-1 | 0.75kW | FFG5A-M006-(x) | 6A | 250VAC | 3.5mA | 176.5x107.5x40 | 162.5x84 | 1.3Kg. | M4 | A | FS – 1 |
| SV015iG5A-1 | 1.5kW | FFG5A-M012-(x) | 12A | 250VAC | 3.5mA | 176.5x147.5x45 | 162.5x124 | 1.8Kg. | M4 | A | FS – 1 |
| THREE PHASE | | | | | NOM. MAX. | | | | | | |
| SV004iG5A-2 | 0.4kW | FFG5A-T005-(x) | 5A | 250VAC | 0.5mA 27mA | 175x76.5x40 | 161x53 | 1.2Kg. | M4 | A | FS – 1 |
| SV008iG5A-2 | 0.75kW | | | | | | | | | | |
| SV008iG5A-2NC | 0.75kW | FFG5A-T006-(x) | 6A | 250VAC | 0.5mA 27mA | 176.5x107.5x40 | 162.5x84 | 1.2Kg. | M4 | A | FS – 1 |
| SV015iG5A-2 | 1.5kW | FFG5A-T012-(x) | 12A | 250VAC | 0.5mA 27mA | 176.5x107.5x40 | 162.5x84 | 1.3Kg. | M4 | A | FS – 2 |
| SV022iG5A-2 | 2.2kW | FFG5A-T020-(x) | 20A | 250VAC | 0.5mA 27mA | 176.5x147.5x45 | 162.5x124 | 1.8Kg. | M4 | A | FS – 2 |
| SV037iG5A-2 | 3.7kW | | | | | | | | | | |
| SV040iG5A-2 | 4.0kW | | | | | | | | | | |
| SV055iG5A-2 | 5.5kW | FFG5A-T030-(x) | 30A | 250VAC | 0.5mA 27mA | 266x185.5x60 | 252x162 | 2Kg. | M4 | B | FS – 2 |
| SV075iG5A-2 | 7.5kW | FFG5A-T050-(x) | 50A | 250VAC | 0.5mA 27mA | 270x189.5x60 | 252x162 | 2.5Kg. | M4 | B | FS – 2 |
| SV075iG5A-2 | 11kW | | 100A | 250VAC | 0.5mA 27mA | | | | | | |
| SV075iG5A-2 | 15kW | | | | | | | | | | |
| SV075iG5A-2 | 18kW | | 120A | 250VAC | 0.5mA 27mA | | | | | | |
| SV075iG5A-2 | 22kW | | | | | | | | | | |
| SV004iG5A-4 | 0.4kW | FFG5A-T005-(x) | 5A | 380VAC | 0.5mA 27mA | 175x76.5x40 | 161x53 | 1.2Kg. | M4 | A | FS – 1 |
| SV008iG5A-4 | 0.75kW | | | | | | | | | | |
| SV008iG5A-4NC | 0.75kW | FFG5A-T006-(x) | 6A | 380VAC | 0.5mA 27mA | 176.5x107.5x40 | 162.5x84 | 1.2Kg. | M4 | A | FS – 1 |
| SV015iG5A-4 | 1.5kW | | | | | | | | | | |
| SV022iG5A-4 | 2.2kW | FFG5A-T011-(x) | 11A | 380VAC | 0.5mA 27mA | 176.5x147.5x45 | 162.5x124 | 1.5Kg. | M4 | A | FS – 2 |
| SV037iG5A-4 | 3.7kW | | | | | | | | | | |
| SV040iG5A-4 | 4.0kW | | | | | | | | | | |
| SV055iG5A-4 | 5.5kW | FFG5A-T030-(x) | 30A | 380VAC | 0.5mA 27mA | 266x185.5x60 | 252x162 | 2Kg. | M4 | B | FS – 2 |
| SV075iG5A-4 | 7.5kW | | | | | | | | | | |
| SV110iG5A-4 | 11kW | FFG5A-T051-(x) | 51A | 380VAC | 0.5mA 27mA | 368x258.5x65 | 354x217 | 2.5Kg. | M6 | B | FS – 2 |
| SV150iG5A-4 | 15kW | | | | | | | | | | |
| SV185iG5A-4 | 18kW | FFG5A-T060-(x) | 60A | 380VAC | 0.5mA 27mA | 460x288x65 | 446x246 | 2.8Kg. | M8 | B | FS – 2 |
| SV220iG5A-4 | 22kW | FFG5A-T070-(x) | 70A | 380VAC | 0.5mA 27mA | 460x288x65 | 446x246 | 2.8Kg. | M8 | B | FS – 2 |

| iG5A series / Standard Filters | | | | | | | | | | | |
|---|---|---|---|---|---|---|---|---|---|---|---|
| INVERTER | POWER | CODE | CURRENT | VOLTAGE | LEAKAGE CURRENT | DIMENSIONS L W H | MOUNTING Y X | WEIGHT | MOUNT | FIG. | OUTPUT CHOKES |
| SINGLE PHASE | | | | | (MAX.) | | | | | | |
| SV004iG5A-1 | 0.4kW | FE-M010-( x ) | 10A | 250VAC | 3.5mA | 150 x 55 x 45 | 140 x 36 | 0.6 Kg | --- | C | FS – 1 |
| SV008iG5A-1 | 0.75kW | | | | | | | | | | |
| SV015iG5A-1 | 1.5kW | FE-M015-( x ) | 15A | 250VAC | 3.5mA | 150 x 55 x 45 | 140 x 36 | 0.6 Kg | --- | C | FS – 1 |
| THREE PHASE | | | | | NOM. MAX. | | | | | | |
| SV004iG5A-2 | 0.4kW | FE-T006-( x ) | 6A | 250VAC | 0.5mA 27mA | 250x110x60 | 238x76 | 1.6Kg. | --- | C | FS – 2 |
| SV008iG5A-2 | 0.75kW | | | | | | | | | | |
| SV008iG5A-2NC | 0.75kW | | | | | | | | | | |
| SV015iG5A-2 | 1.5kW | FE-T012-( x ) | 12A | 250VAC | 0.5mA 27mA | 250x110x60 | 238x76 | 1.6Kg. | --- | C | FS – 2 |
| SV022iG5A-2 | 2.2kW | FE-T020-( x ) | 20A | 250VAC | 0.5mA 27mA | 270x140x60 | 258x106 | 2.2Kg. | --- | C | FS – 2 |
| SV037iG5A-2 | 3.7kW | | | | | | | | | | |
| SV040iG5A-2 | 4.0kW | | | | | | | | | | |
| SV055iG5A-2 | 5.5kW | FE-T030-( x ) | 30A | 250VAC | 0.5mA 27mA | 270x140x60 | 258x106 | 2.4Kg. | --- | C | FS – 2 |
| SV075iG5A-2 | 7.5kW | FE-T050-( x ) | 50A | 250VAC | 0.5mA 27mA | 270x140x90 | 258x106 | 3.2Kg. | --- | C | FS – 2 |
| SV110iG5A-2 | 11kW | FE-T100-( x ) | 100A | 250VAC | 0.5mA 27mA | 420x200x130 | 408x166 | 13.8Kg. | --- | C | FS – 3 |
| SV150iG5A-2 | 15kW | | | | | | | | | | |
| SV185iG5A-2 | 18kW | FE-T120-( x ) | 120A | 250VAC | 0.5mA 27mA | 420x200x130 | 408x166 | 13.8Kg. | --- | C | FS – 3 |
| SV220iG5A-2 | 22kW | | | | | | | | | | |
| SV004iG5A-4 | 0.4kW | FE-T006-( x ) | 6A | 380VAC | 0.5mA 27mA | 250x110x60 | 238x76 | 1.6Kg. | --- | C | FS – 2 |
| SV008iG5A-4 | 0.75kW | | | | | | | | | | |
| SV008iG5A-4NC | 0.75kW | | | | | | | | | | |
| SV015iG5A-4 | 1.5kW | | | | | | | | | | |
| SV022iG5A-4 | 2.2kW | FE-T012-( x ) | 12A | 380VAC | 0.5mA 27mA | 250x110x60 | 238x76 | 1.6Kg. | --- | C | FS – 2 |
| SV037iG5A-4 | 3.7kW | | | | | | | | | | |
| SV040iG5A-4 | 4.0kW | | | | | | | | | | |
| SV055iG5A-4 | 5.5kW | FE-T030-( x ) | 30A | 380VAC | 0.5mA 27mA | 270x140x60 | 258x106 | 2.4 Kg. | --- | C | FS – 2 |
| SV075iG5A-4 | 7.5kW | | | | | | | | | | |
| SV110iG5A-4 | 11W | FE-T050-( x ) | 50A | 380VAC | 0.5mA 27mA | 270x140x90 | 258x106 | 3.2Kg. | --- | C | FS – 2 |
| SV150iG5A-4 | 15kW | | | | | | | | | | |
| SV185iG5A-4 | 18kW | FE-T060-( x ) | 60A | 380VAC | 0.5mA 27mA | 270x140x90 | 258x106 | 3.2Kg. | --- | C | FS – 2 |
| SV220iG5A-4 | 22kW | FE-T070-( x ) | 70A | 380VAC | 0.5mA 27mA | 350x180x90 | 338x146 | 7.5Kg. | --- | C | FS – 2 |

**( x ) ( 1 ) Industrial environment EN50081-2 (A class) -> EN61000-6-4:02**
**( 3 ) Domestic and industrial environment EN50081-1 (B class) -> EN61000-6-3:02**

## FF SERIES ( Footprint )

**FIG. A**

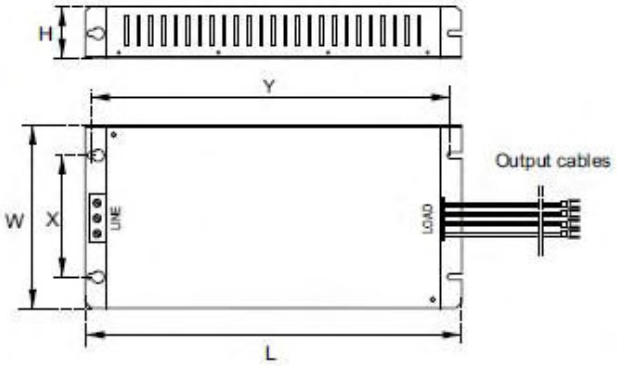


**FIG. B**

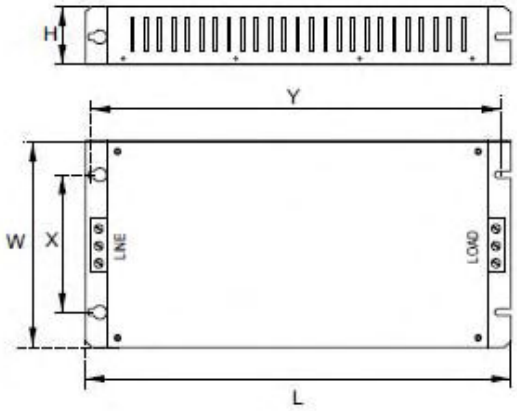


## FE SERIES ( Standard )

**FIG. C**

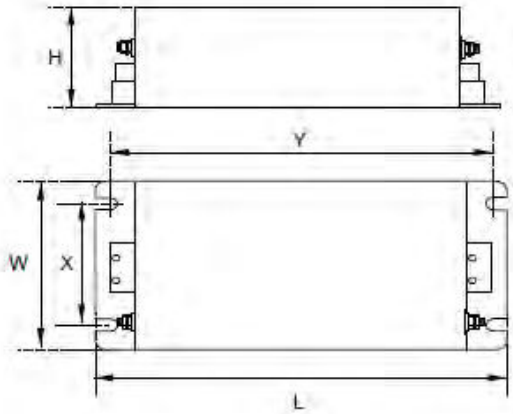


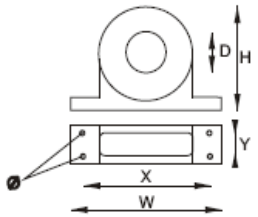


## FS SERIES ( output chokes )

| CODE | D | W | H | X | Ø |
|---|---|---|---|---|---|
| FS – 1 | 21 | 85 | 46 | 70 | 5 |
| FS – 2 | 28.5 | 105 | 62 | 90 | 5 |
| FS – 3 | 48 | 150 | 110 | 125 x 30 | 5 |


LS VMC vector motor control

**Vector Motor Control Ibérica S.L.**
C/ Mar del Carib, 10
Pol. Ind. La Torre del Rector
08130 Santa Perpètua de Mogoda
(BARCELONA) ESPAÑA
Tel. (+34) 935 748 206
Fax (+34) 935 748 248
info@vmc.es
www.vmc.es

# Warranty

| | | | | |
|---|---|---|---|---|
| Maker | LS Industrial Systems Co., Ltd. | | Installation (Start-up) Date | |
| Model No. | SV-iG5A | | Warranty Period | |
| Customer Information | Name | | | |
| | Address | | | |
| | Tel. | | | |
| Sales Office (Distributor) | Name | | | |
| | Address | | | |
| | Tel. | | | |

Warranty period is 12 months after installation or 18 months after manufactured when the installation date is unidentified. However, the guarantee term may vary on the sales term.

**IN-WARRANTY service information**

If the defective part has been identified under normal and proper use within the guarantee term, contact your local authorized LS distributor or LS Service center.

**OUT-OF WARRANTY service information**
The guarantee will not apply in the following cases, even if the guarantee term has not expired.

- Damage was caused by misuse, negligence or accident.
- Damage was caused by abnormal voltage and peripheral devices' malfunction (failure).
- Damage was caused by an earthquake, fire, flooding, lightning, or other natural calamities.
- When LS nameplate is not attached.
- When the warranty period has expired.

## Revision History

| No | Date | Edition | Changes |
|---|---|---|---|
| 1 | 2004. 2 | First Release | Only 5.5, 7.5kW included |
| 2 | 2004. 9 | 2nd Edition | 0.4~4.0kW added to first release |
| 3 | 2005. 1 | 3rd Edition | 1) Chap. 16. Options changed.<br>2) Data values changed and revised. |
| 4 | 2005. 6 | 4th Edition | CI changed |
| 5 | 2006. 5 | 5th Edition | S/W Version up (V1.7) |
| 6 | 2007. 11 | 6th Edition | S/W Version up (V2.0) |
| 7 | 2008. 4 | 7th Edition | S/W Version up (V2.2) |
| 8 | 2008. 11 | 8th Edition | Contents of EMI / RFI POWER LINE FILTERS updated |