SIEMENS

Data sheet 3VA1220-4EF32-0AA0

Siemens EcoTech

circuit breaker 3VA1 IEC Frame 250 breaking capacity class S Icu=36 kA @ 415 V 3-pole, line protection TM240, ATAM, In=200 A overload protection Ir=140 A...200 A short-circuit protection Ii=5...10 x In nut keeper kit

Model	
product brand name	SENTRON
product designation	Molded case circuit breaker
design of the product	Line protection
design of the overcurrent release	TM240
protection function of the overcurrent release	LI
number of poles	3
General technical data	
insulation voltage / rated value	800 V
operating voltage / at DC / rated value	500 V
operating voltage / at AC / rated value	690 V
power loss [W] / maximum	42 W
power loss [W] / for rated value of the current / at AC / in hot operating state / per pole	14 W
mechanical service life (operating cycles) / typical	20 000
electrical endurance (operating cycles) / at AC-1 / at 380/415 V	8 000
electrical endurance (operating cycles) / at AC-1 / at 690 V	5 400
product feature / for neutral conductors / upgradable/retrofittable / short-circuit and overload proof	No
ground-fault monitoring version	Without
product function	
● communication function	No
● other measurement function	No
Net Weight	1.575 kg
Current	
operational current	
● at 40 °C	200 A
● at 45 °C	200 A
● at 50 °C	200 A
● at 55 °C	194 A
● at 60 °C	188 A
● at 65 °C	182 A
● at 70 °C	176 A
Switching capacity according to IEC 60947	
switching capacity class of the circuit breaker	S
maximum short-circuit current breaking capacity (Icu)	

Subject to change without notice
© Copyright Siemens

● at 240 V	55 kA
● at 415 V	36 kA
● at 440 V	25 kA
● at 500 V	10 kA
● at 690 V	7 kA
operating short-circuit current breaking capacity (Ics)	
● at 240 V	55 kA
● at 415 V	36 kA
● at 440 V	25 kA
● at 500 V	10 kA
● at 690 V	5 kA
short-circuit current making capacity (Icm)	
● at 240 V	121 kA
● at 415 V	75.5 kA
● at 440 V	52.5 kA
● at 500 V	17 kA
● at 690 V	11.9 kA
design of short-circuit protection	For switching power values in DC networks, see the 3VA molded case circuit breaker device manual; link to be found under Service & Support in the last chapter
Adjustable parameters	
product feature / for L-tripping / can be switched on/off	No
adjustable response value setting current (Ir) / of the L-trip / with I2t characteristic	
● minimum	140 A
● maximum	200 A
adjustable response value delay time (tr) / for L-tripping / with I2t characteristic	
● minimum	1 s
● maximum	1 s
adjustable response value setting current (Ii) / for I-tripping	
● minimum	1 000 A
● maximum	2 000 A
adjustable setting current (InN) / for N-tripping	
● minimum	0 A
● maximum	0 A
product function / grounding protection	No
Mechanical Design	
product component	
● undervoltage release	No
● voltage trigger	No
● trip indicator	No
height [in]	6.22 in
height	158 mm
width [in]	4.13 in
width	105 mm
depth [in]	2.76 in
depth	70 mm
Connections	
arrangement of electrical connectors / for main current circuit	Front terminal
type of electrical connection / for main current circuit	nut keeper kit on both ends
type of connectable conductor cross-sections / for flat-bar terminal connection / minimum	13 x 1 mm
type of connectable conductor cross-sections / for flat-bar terminal connection / maximum	25 x 8 mm
design of the surface / of the connections / on the top of the switch (N, 1, 3, 5)	Silver
design of the surface / of the connections / on the bottom of the switch (N, 2, 4, 6)	Silver
Auxiliary circuit	
number of CO contacts / for auxiliary contacts	0

Subject to change without notice
© Copyright Siemens

Accessories	
product extension / optional / motor drive	Yes

Environmental conditions	
protection class IP / on the front	IP40
ambient temperature	
● during operation / minimum	-25 °C
● during operation / maximum	70 °C
● during storage / minimum	-40 °C
● during storage / maximum	80 °C

Environmental footprint	
global warming potential [CO2 eq] / total	285.47 kg
global warming potential [CO2 eq] / during manufacturing	6.87 kg
global warming potential [CO2 eq] / during operation	279 kg
global warming potential [CO2 eq] / after end of life	-0.78 kg
reference code / according to IEC 81346-2	Q

Approvals / Certificates

General Product Approval

CCC VDE Miscellaneous

General Product Approval | EMV | Test Certificates

Confirmation EG-Konf. RCM Type Test Certificates/Test Report Special Test Certificate

Test Certificates | Maritime application

Miscellaneous ABS BUREAU VERITAS DNV LRS RMRS

Maritime application | other | Environment

CCS (China Classification Society) Miscellaneous Confirmation 产品合格 QC PASS Environmental Confirmations EPD

Environment

Environmental Confirmations Siemens EcoTech

Further information

Information on the packaging
https://support.industry.siemens.com/cs/ww/en/view/109813875
Information for data generation and storage
https://support.industry.siemens.com/cs/ww/en/view/109995012
Information- and Downloadcenter (Catalogs, Brochures,…)
https://www.siemens.com/lowvoltage/catalogs
Industry Mall (Online ordering system)
https://mall.industry.siemens.com/mall/en/en/Catalog/product?mlfb=3VA1220-4EF32-0AA0
Service&Support (Manuals, Certificates, Characteristics, FAQs,...)

Subject to change without notice
© Copyright Siemens

https://support.industry.siemens.com/cs/ww/en/ps/3VA1220-4EF32-0AA0

Image database (product images, 2D dimension drawings, 3D models, device circuit diagrams, ...)
https://www.automation.siemens.com/bilddb/cax_en.aspx?mlfb=3VA1220-4EF32-0AA0

CAx-Online-Generator
https://www.siemens.com/cax

Tender specifications
https://www.siemens.com/specifications

Characteristic curves
https://curves.simaris.siemens.com/curves/<mmp_prod_noCOMP="HAUPT"></mmp_prod__no>

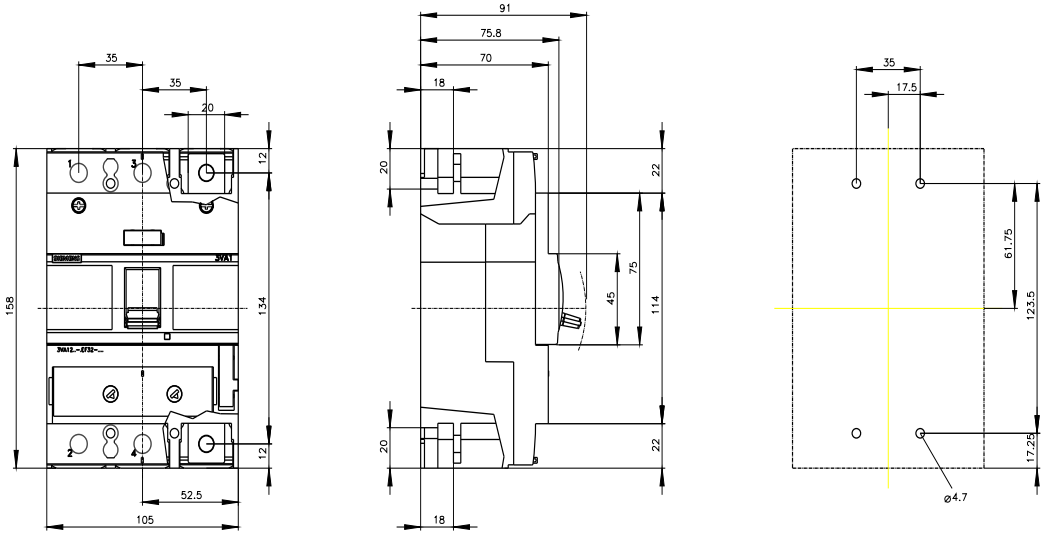

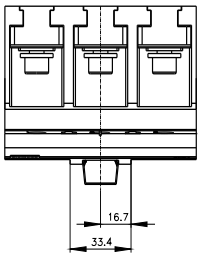

Subject to change without notice
© Copyright Siemens

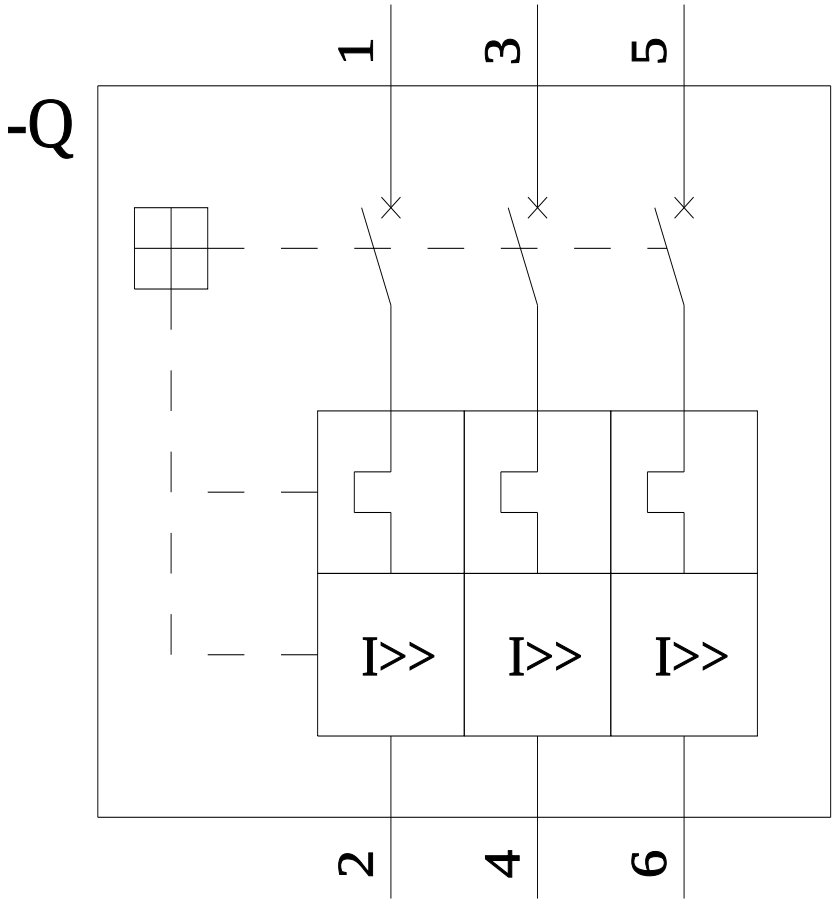

last modified: 4/18/2026

Subject to change without notice
© Copyright Siemens

Subject to change without notice
© Copyright Siemens